(1:1)

(LW004) x 1

PS054 x 1

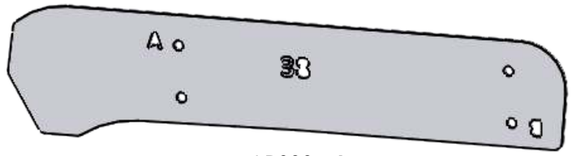
LR038 x 1

(LW010) x 1

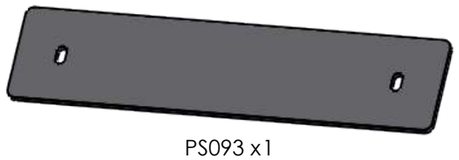
PS093 x 1

LR009 x 1

LR005 x 2

LR006 x 2

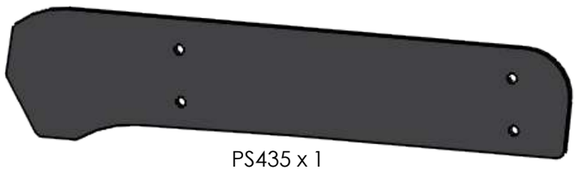
PS435 x 1

PS425 x 1

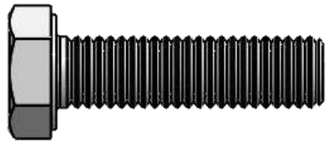
FB014 x 6

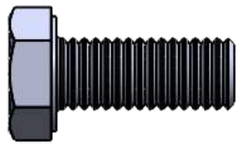
FS067 x 12

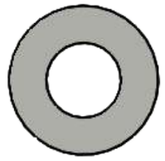
FW021 x 28

FN080 x 10

PS414 x 18

PS065 x 4

PS419 x 12

FS109 (M8 x 90) x 2

LR052 x 2

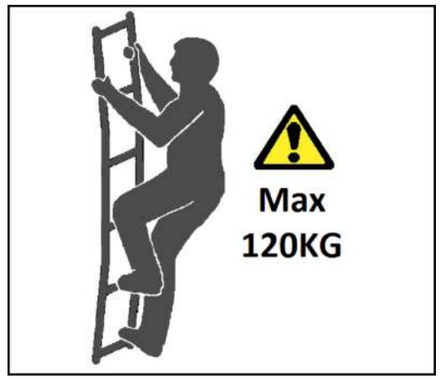

13mm x 2

4mm x 1

9mm x 1

13mm x 1

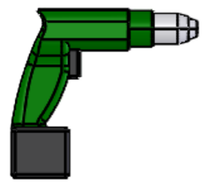

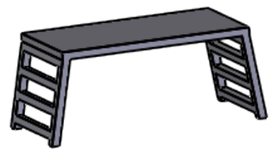

1.

2.

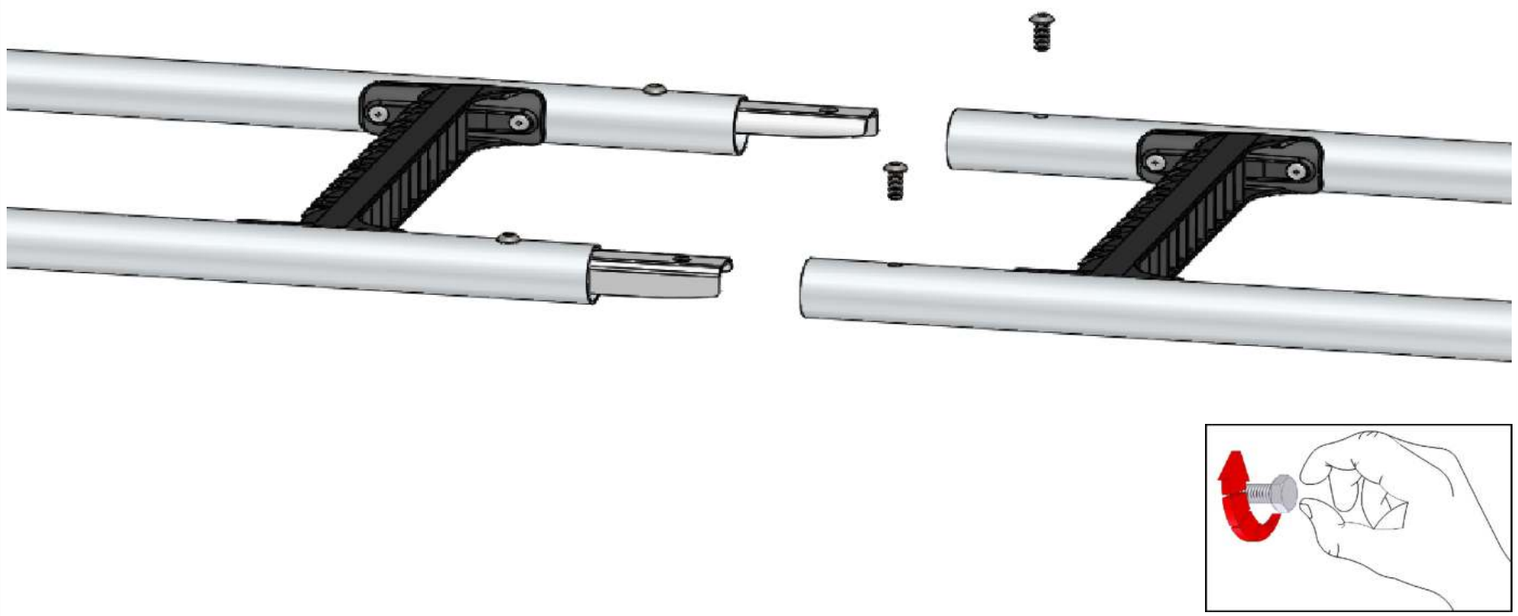

3.

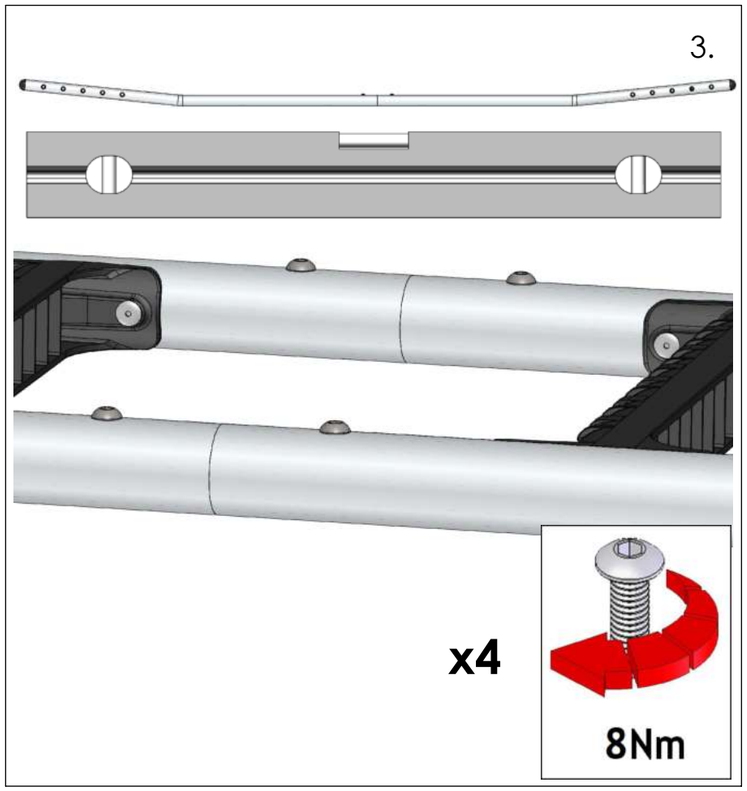

4.

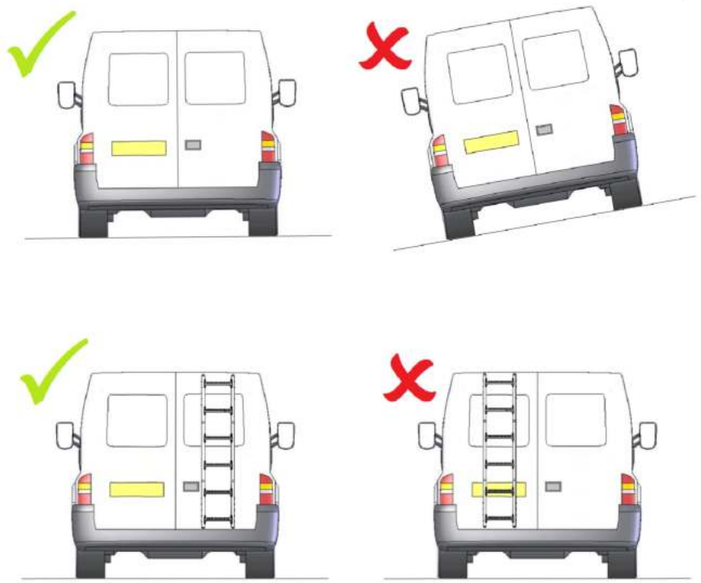

5.

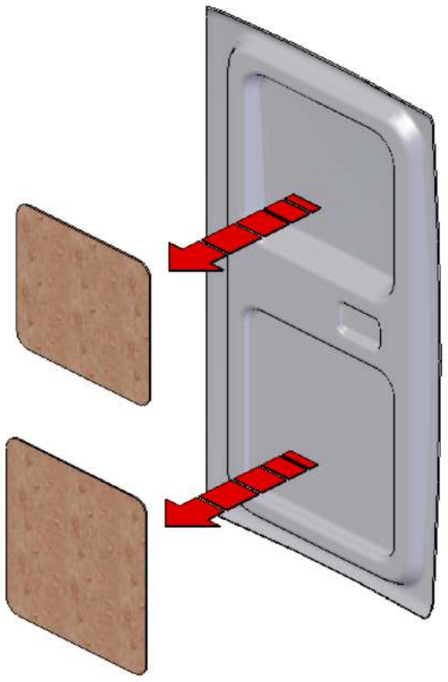

A

6.

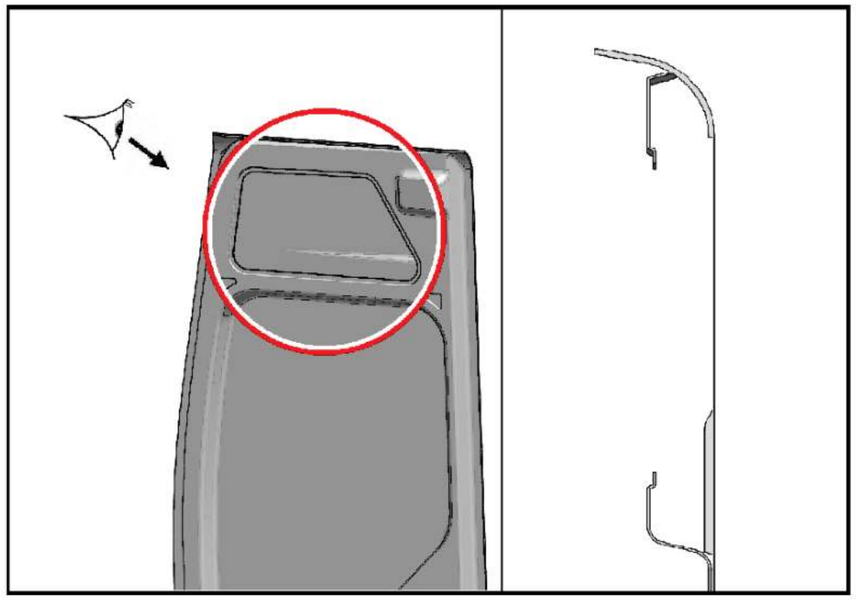

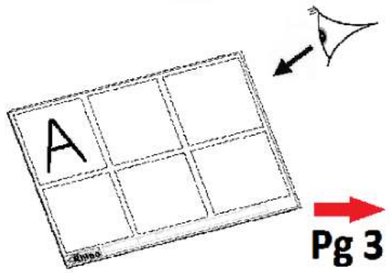

B

7.

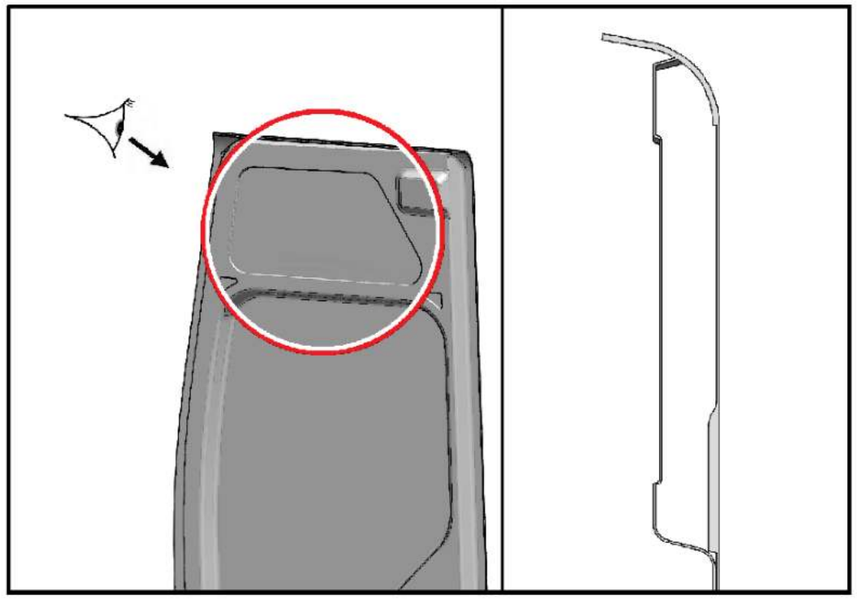

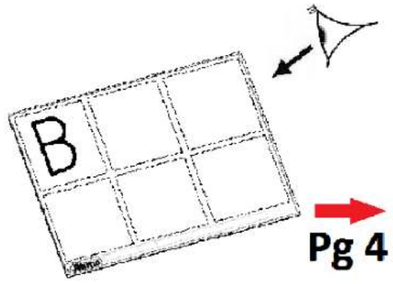

8.

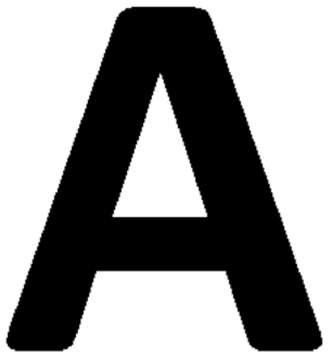

9.

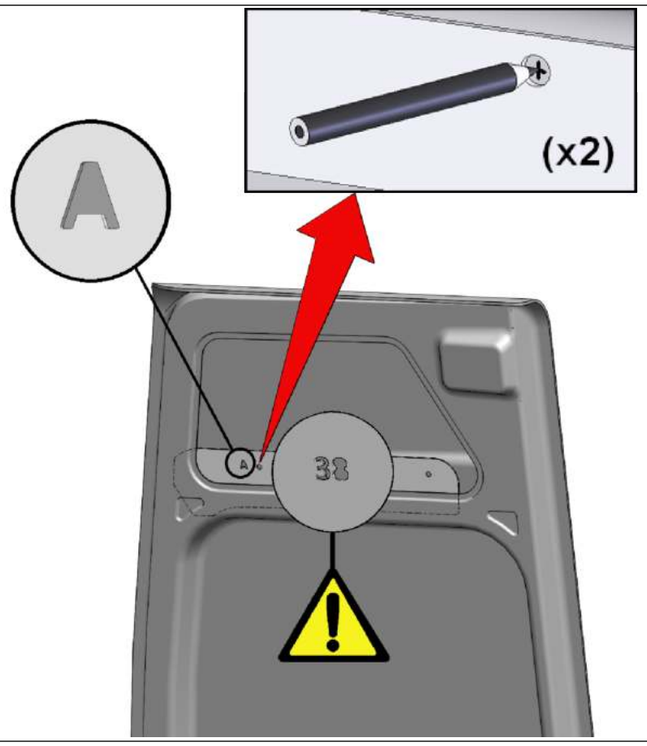

10.

∅4mm (x 2)

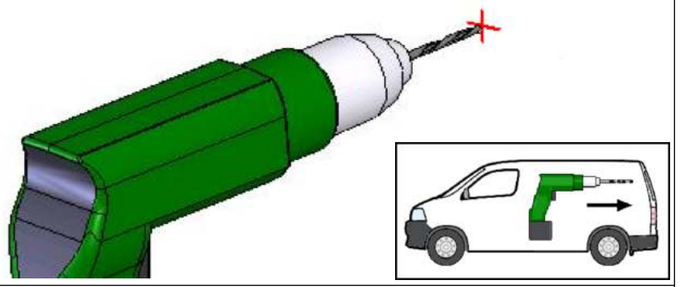

∅9mm (x 2)

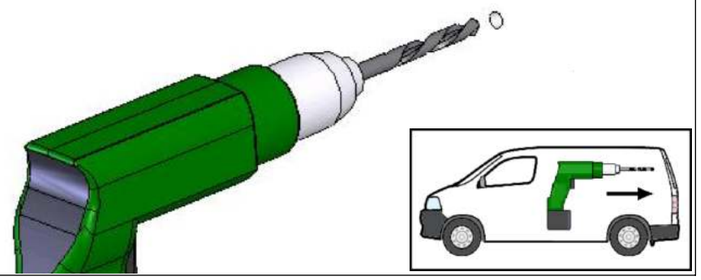

11.

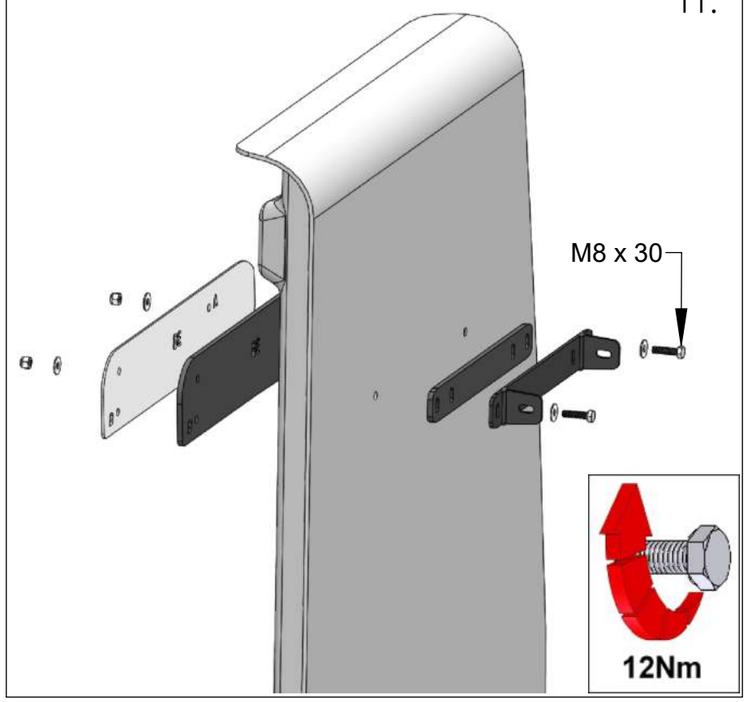

12.

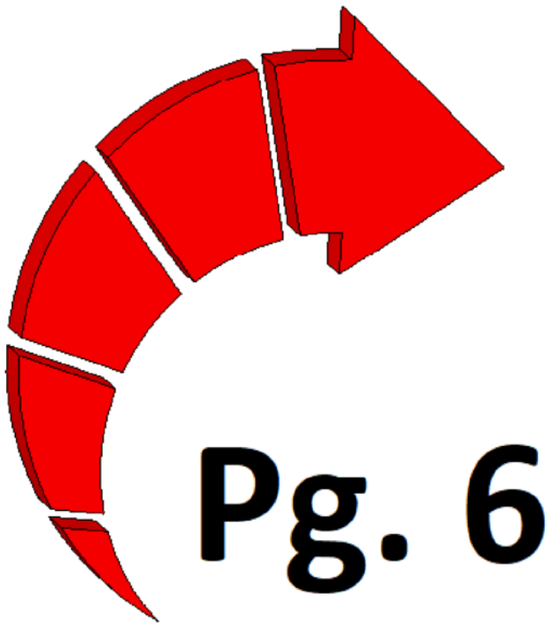

13.

14.

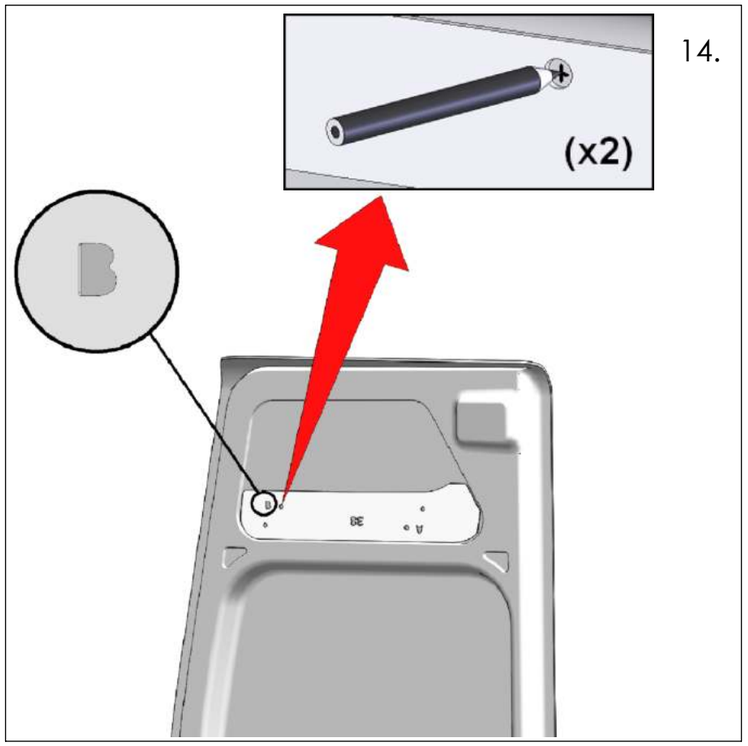

15.

∅ 4mm (x 2)

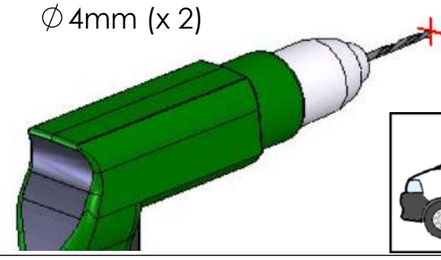

∅ 9mm (x 2)

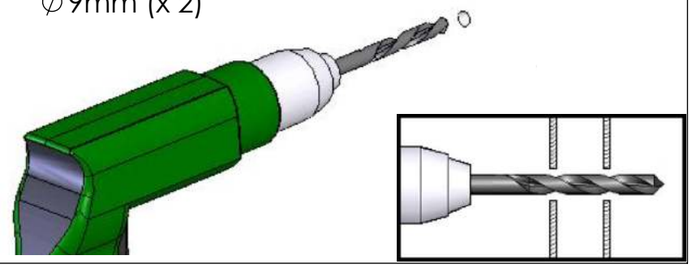

16.

∅ 13mm (x 2)

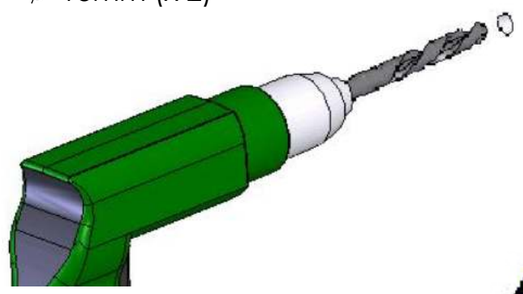

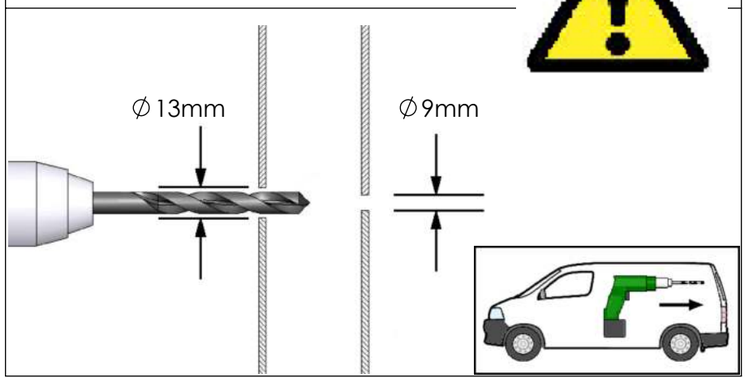

17.

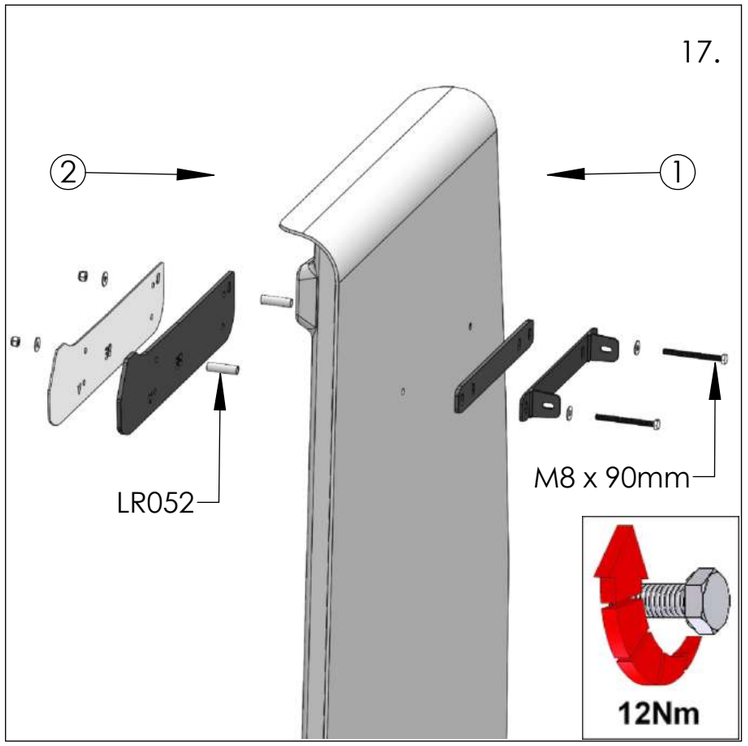

18.

Pg. 6

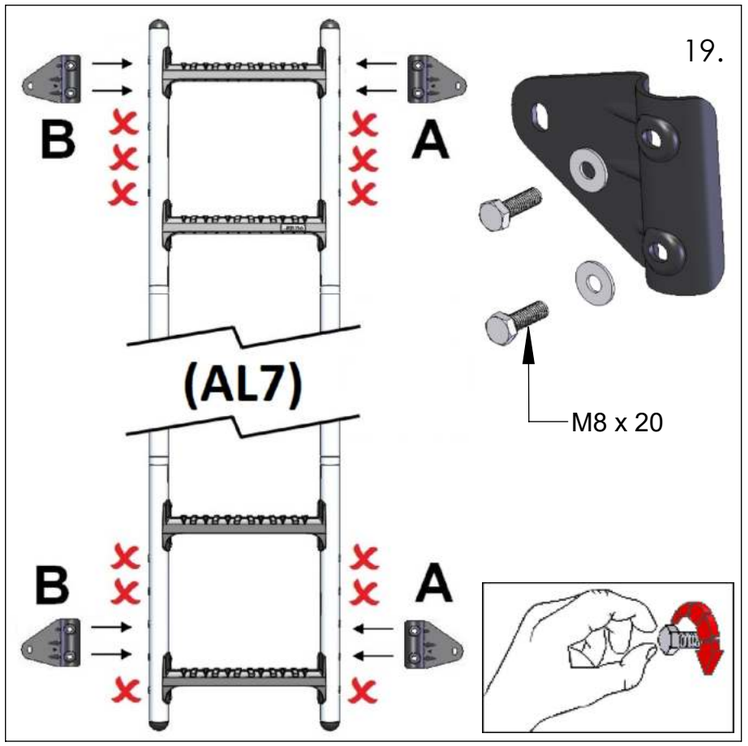
19.
B
A
(AL7)
M8 x 20
B
A

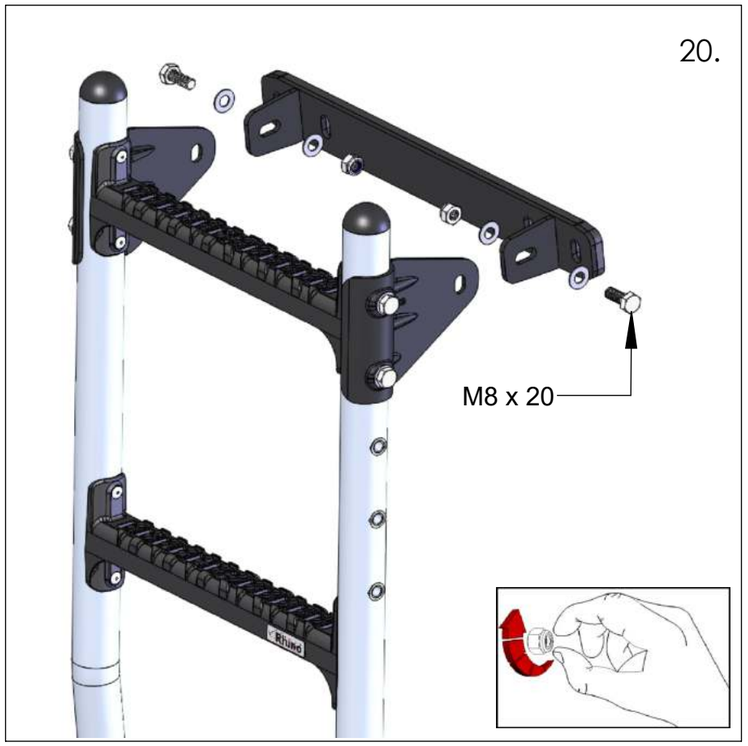
20.
M8 x 20

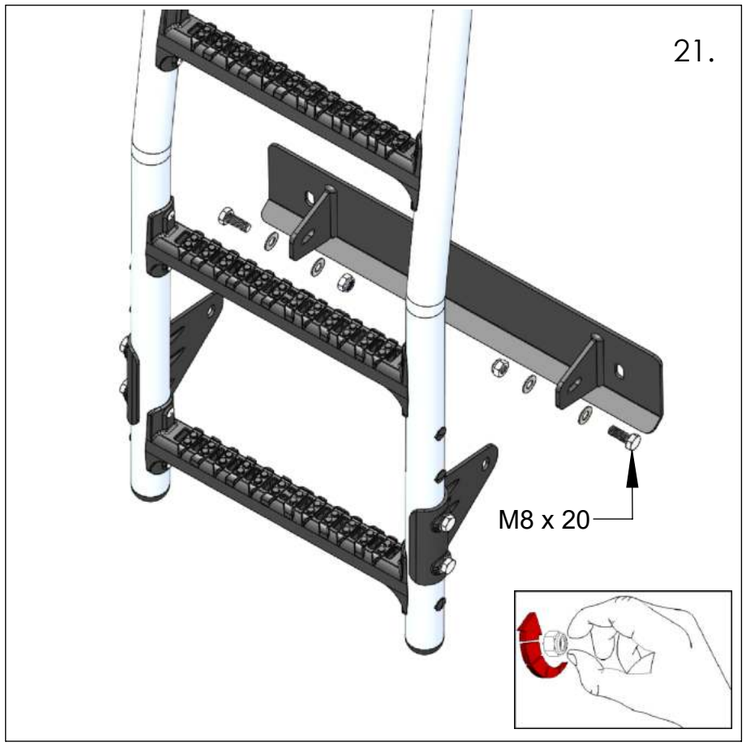
21.
M8 x 20

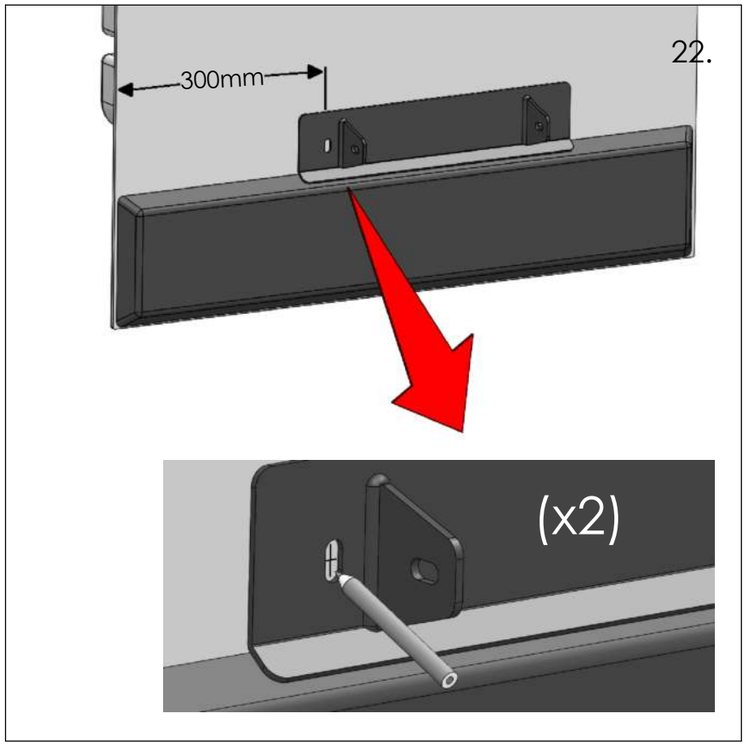
22.
300mm
(x2)

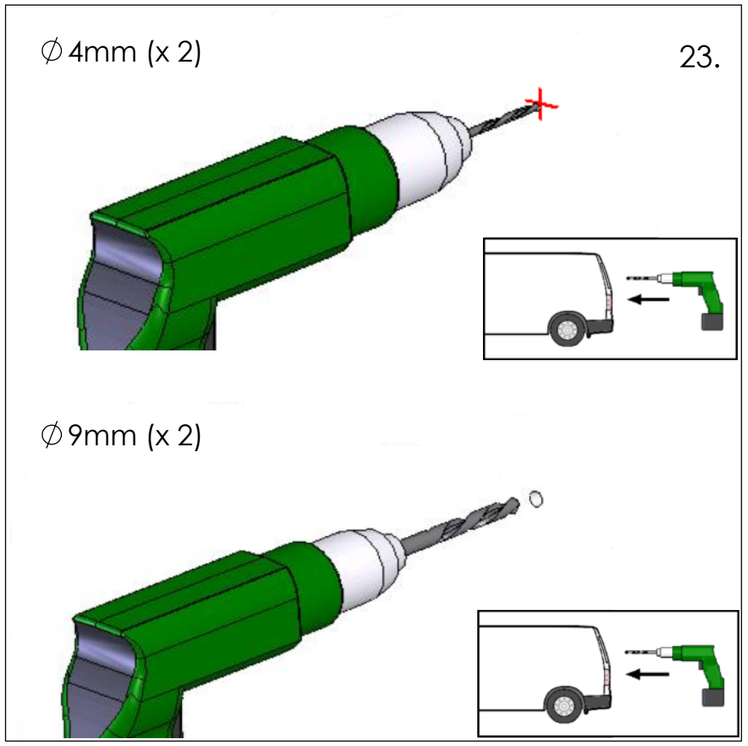
∅ 4mm (x 2)
23.
∅ 9mm (x 2)

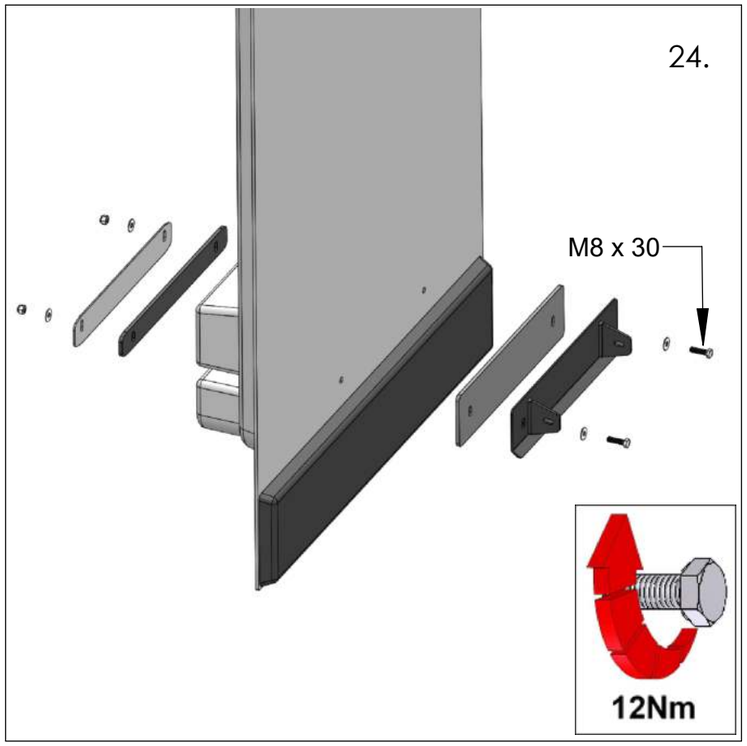
24.
M8 x 30
12Nm

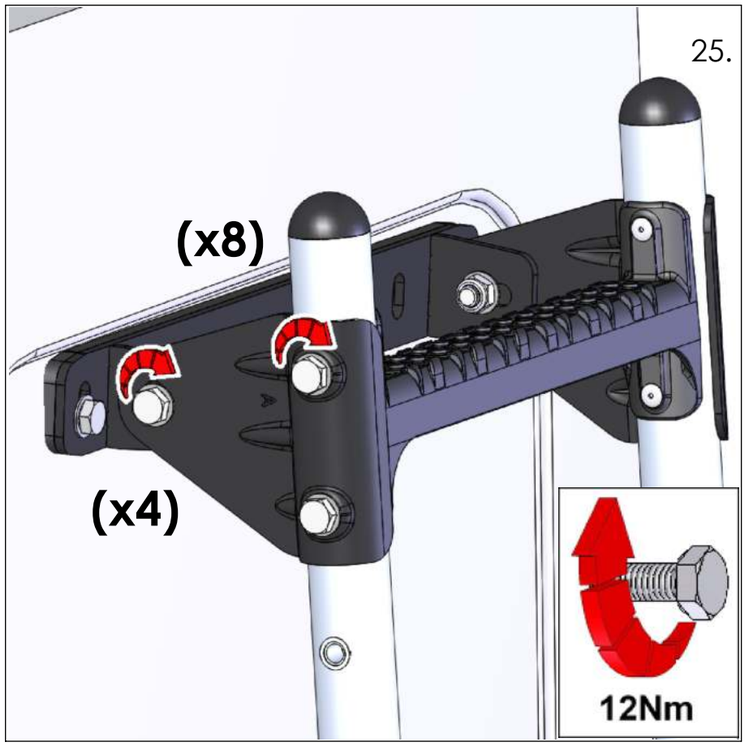
25.
(x8)
(x4)
12Nm

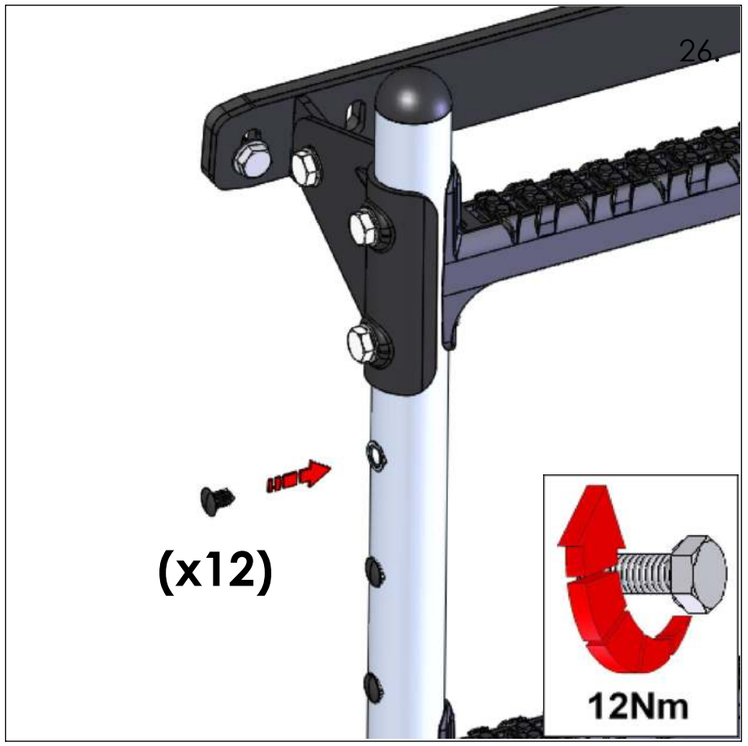
26.
(x12)
12Nm

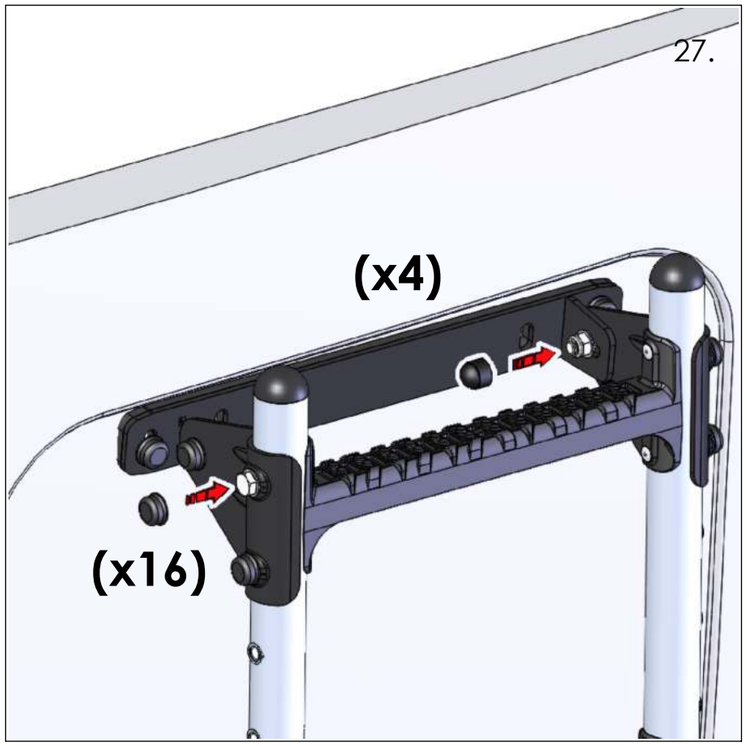
27.
(x4)
(x16)

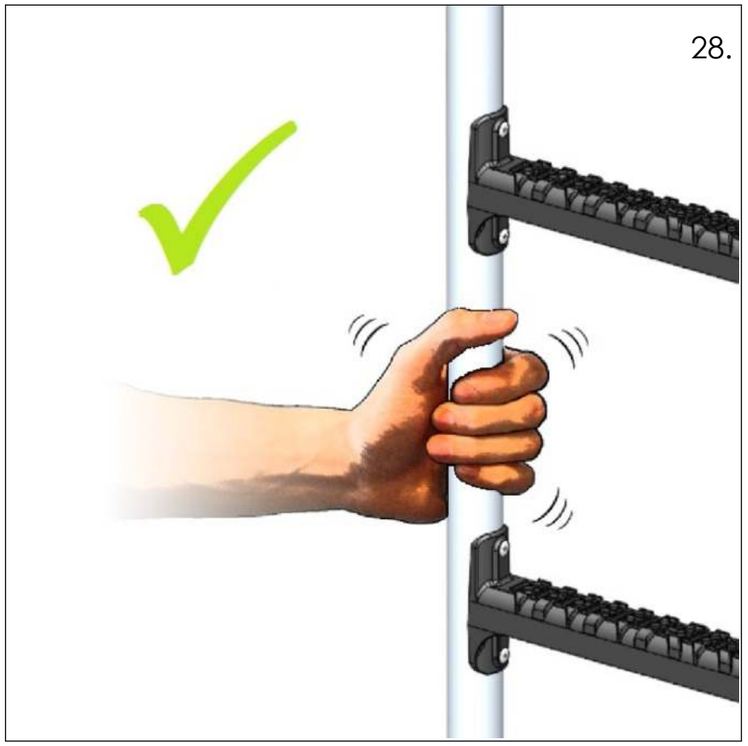
28.