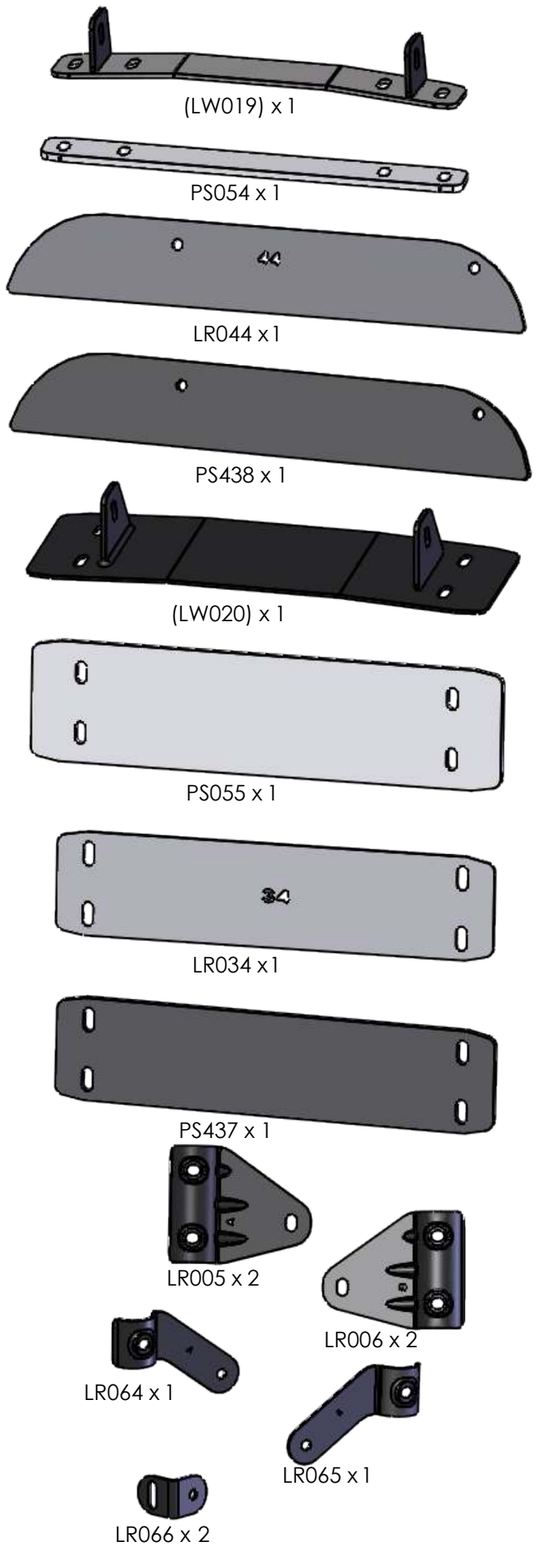
(LW019) x 1
PS054 x 1
LR044 x 1
PS438 x 1
(LW020) x 1
PS055 x 1
LR034 x 1
PS437 x 1
LR005 x 2
LR006 x 2
LR064 x 1
LR065 x 1
LR066 x 2

(1:1)

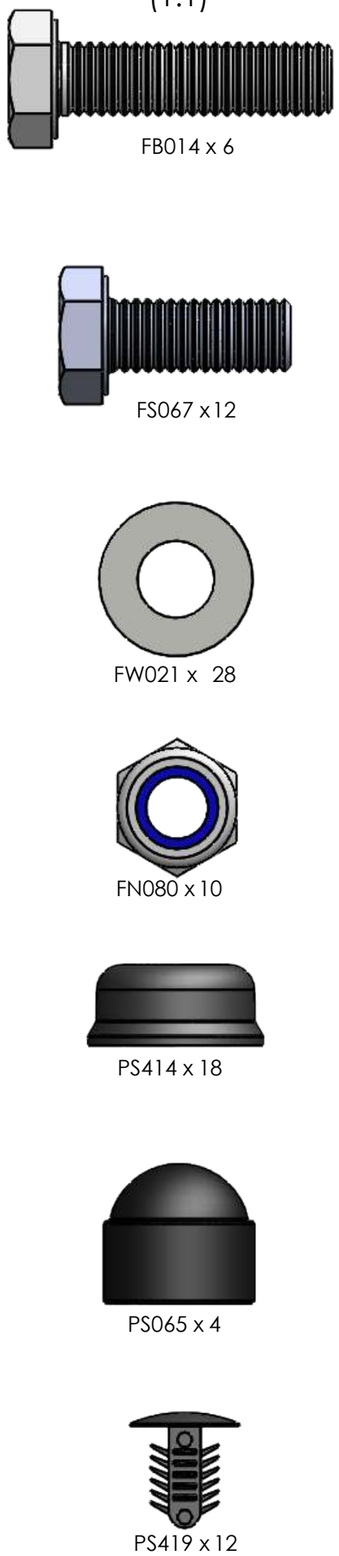
FB014 x 6
FS067 x12
FW021 x 28
FN080 x 10
PS414 x 18
PS065 x 4
PS419 x 12

(1:1)

PS065 x 2
PS414 x 2
PS204 x 2
PS203 x 4
FW021 x 10
4010012 - FN060 x 4
FN080 x 2
FS067 x 4
FS105 x 2
FS109 x 2
LA074 x 2

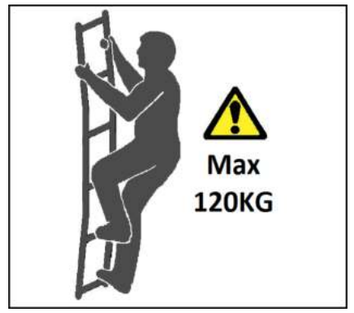
Max
120KG

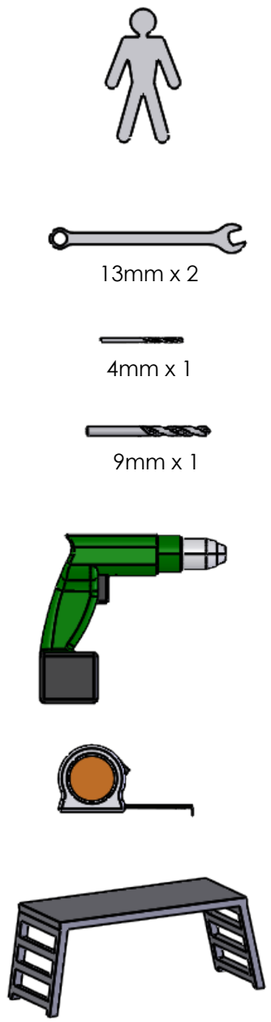
13mm x 2
4mm x 1
9mm x 1

1.

2.

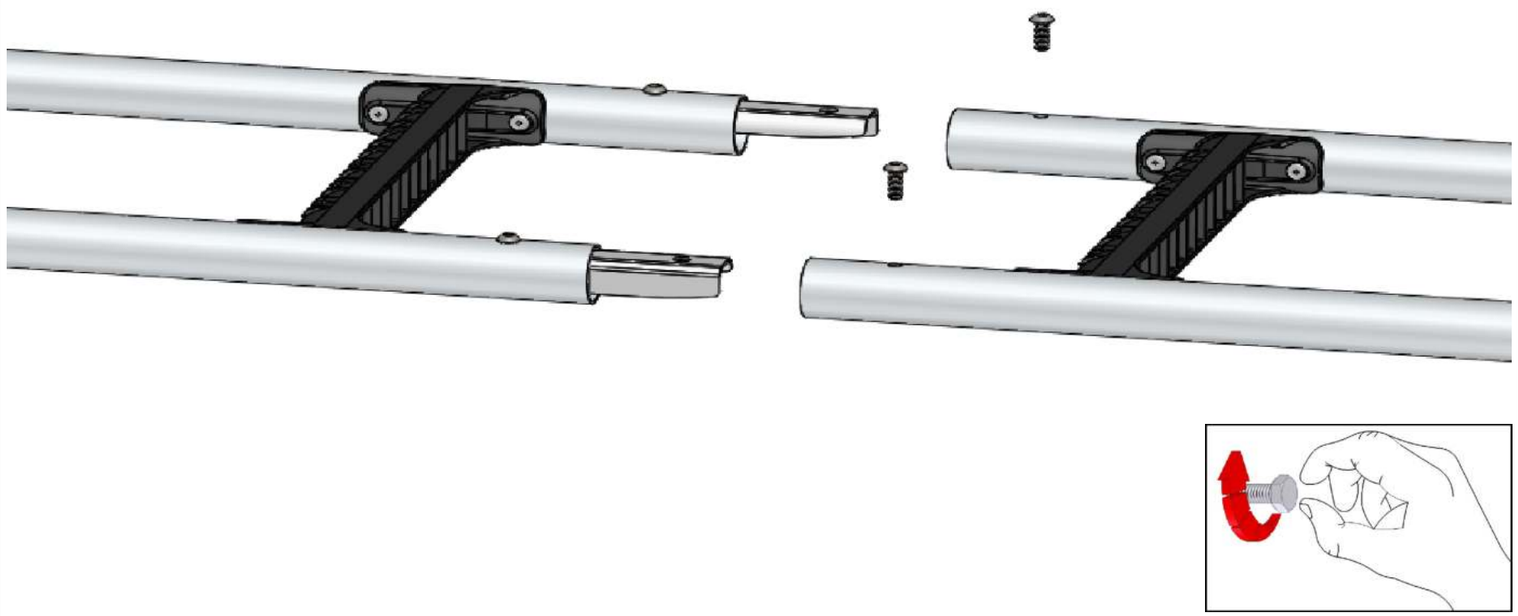

3.

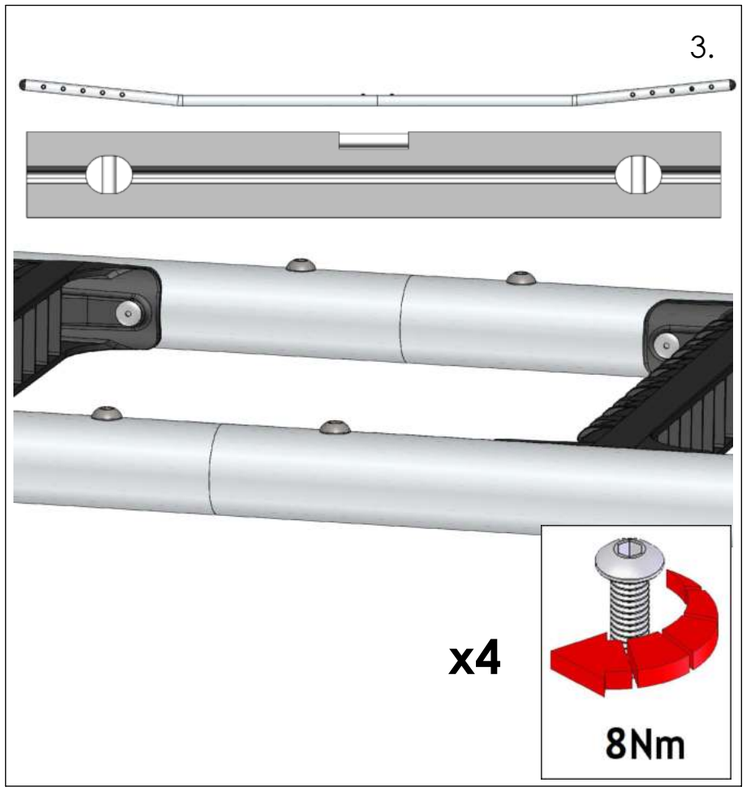

4.

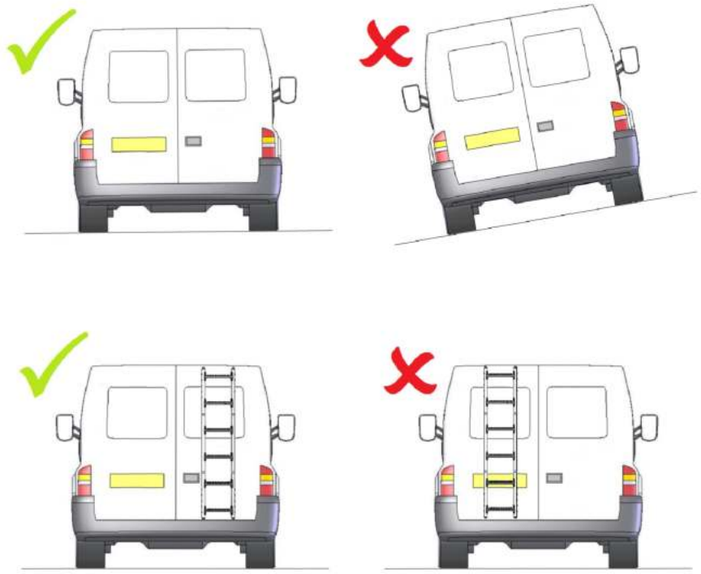

5.

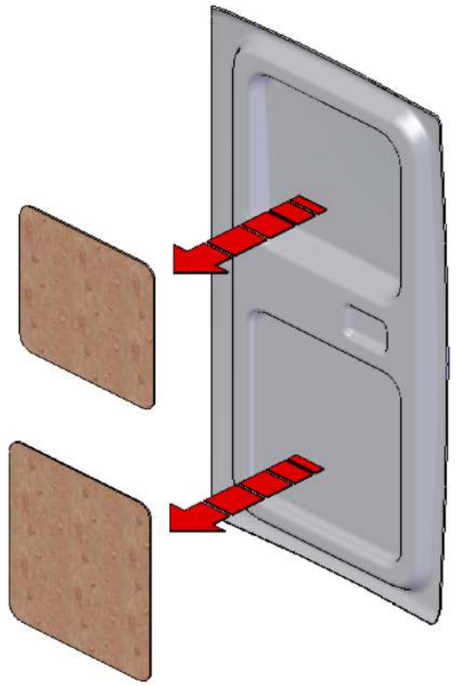

6.

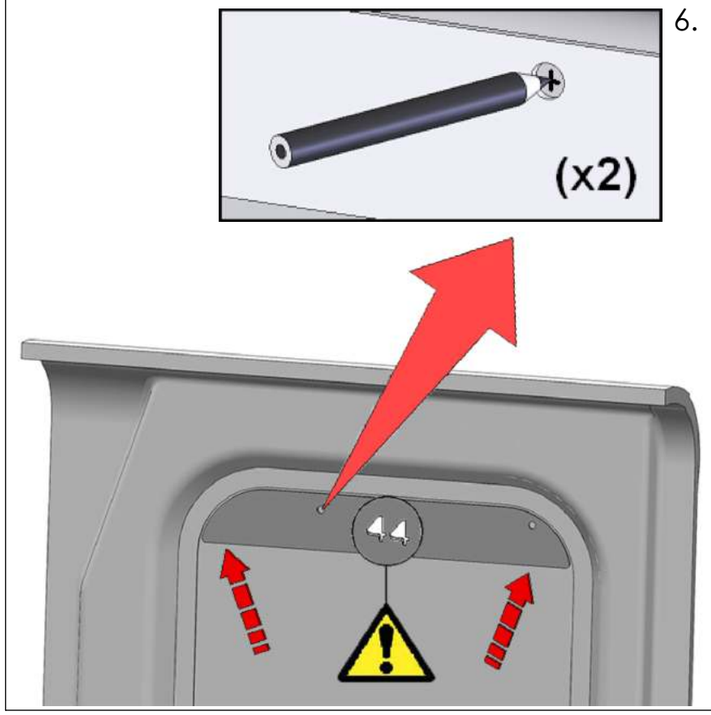

7.

∅ 4mm (x 2)

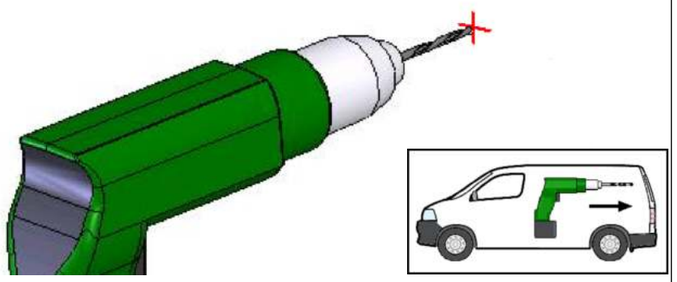

∅ 9mm (x 2)

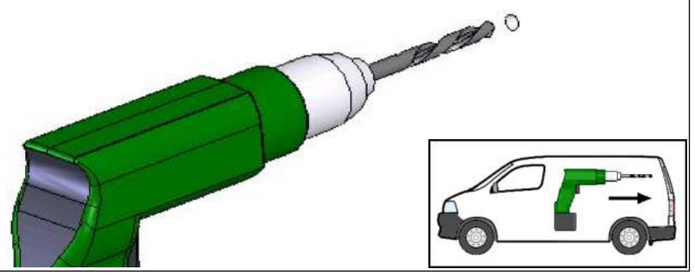

8.

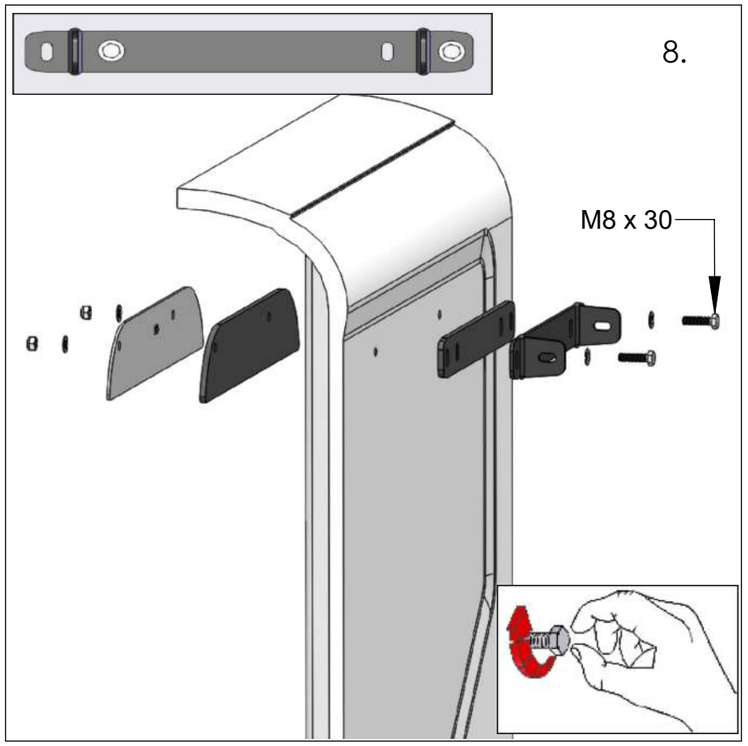

9.

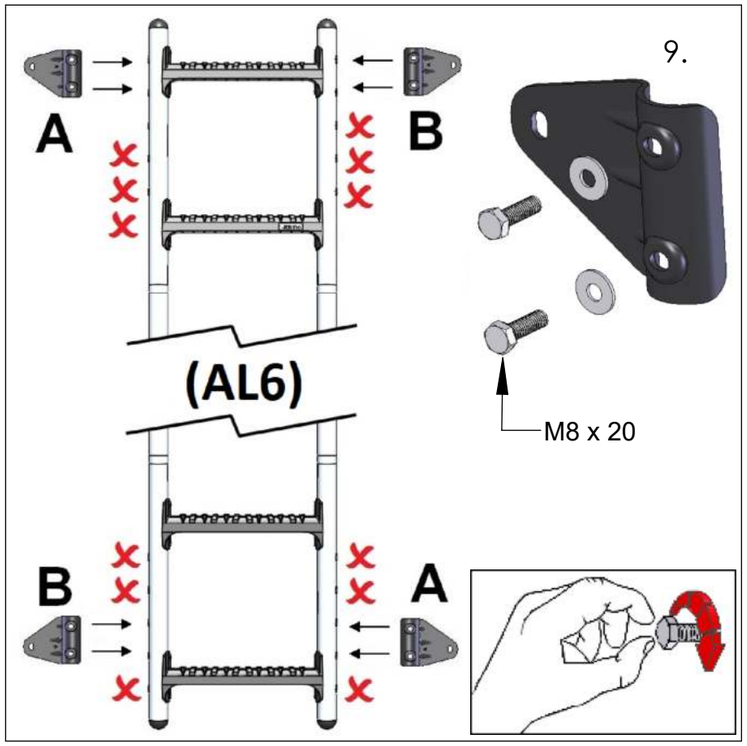

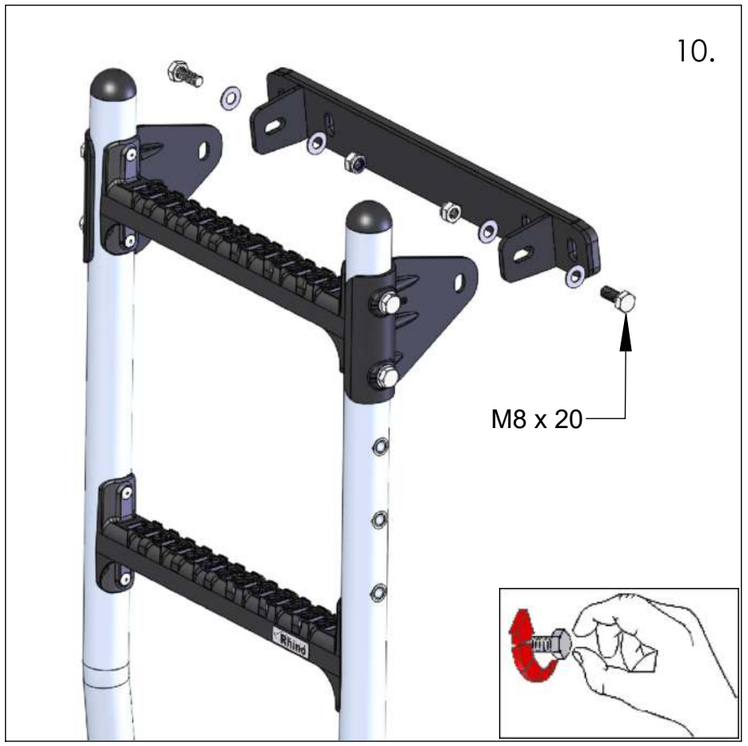
10.
M8 x 20

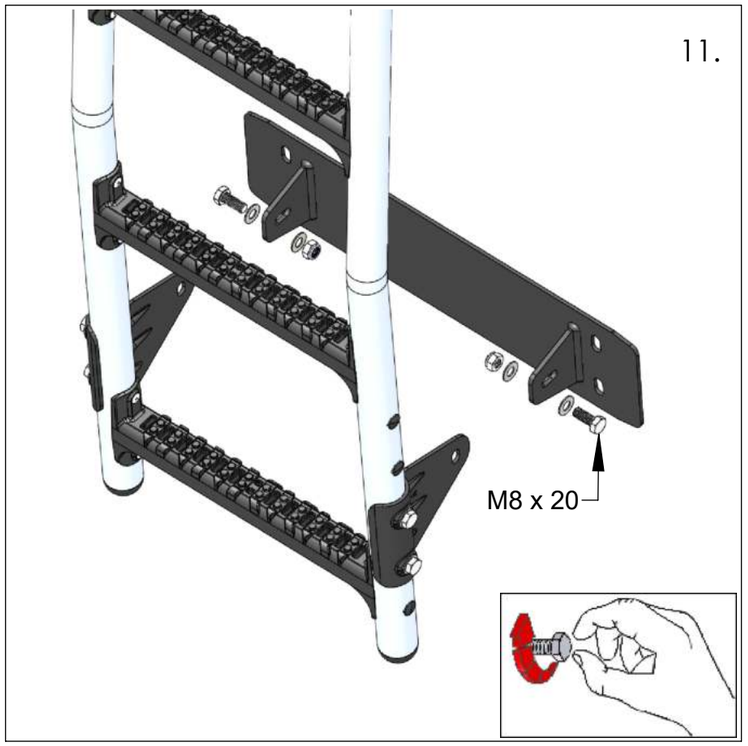
11.
M8 x 20

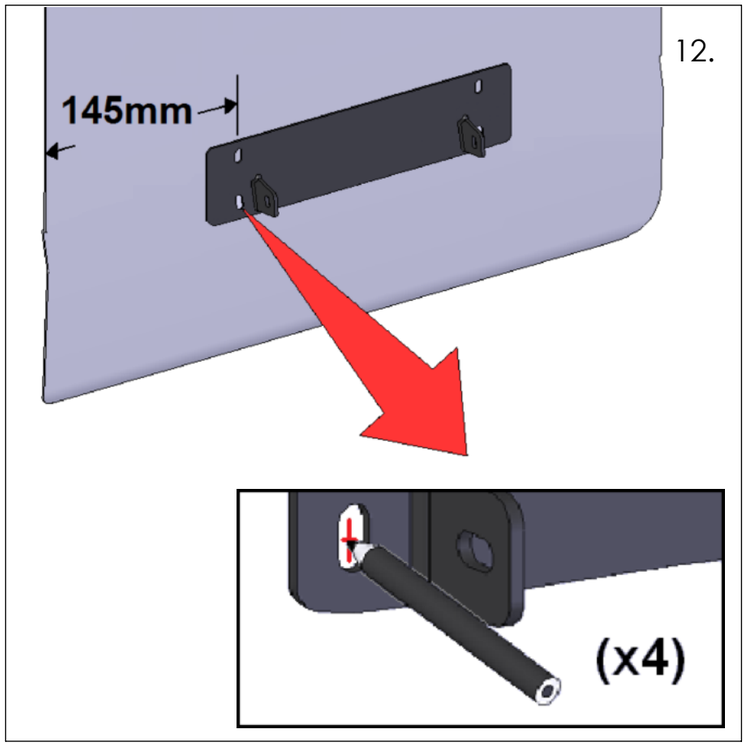
12.
145mm
(x4)

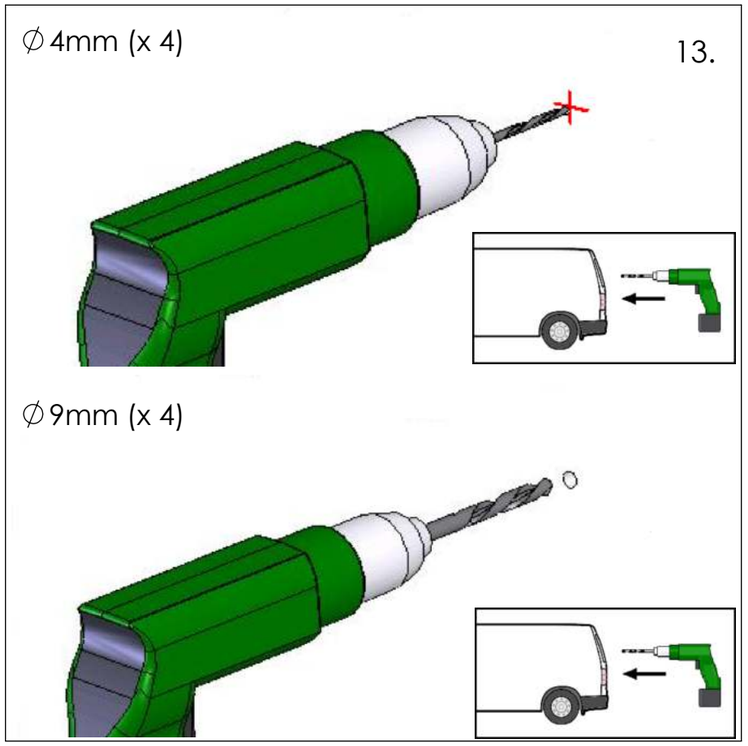
∅4mm (x 4)
13.
∅9mm (x 4)

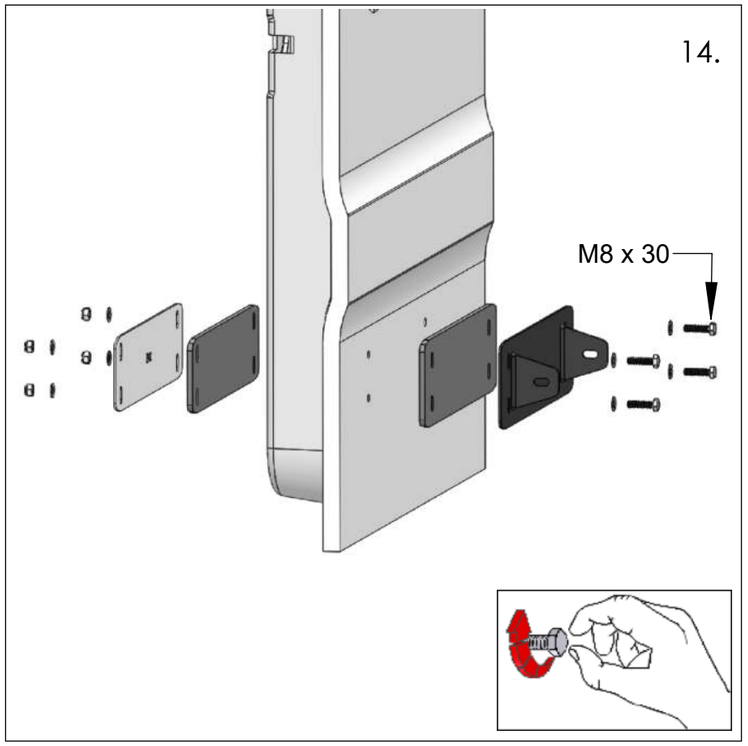
14.
M8 x 30

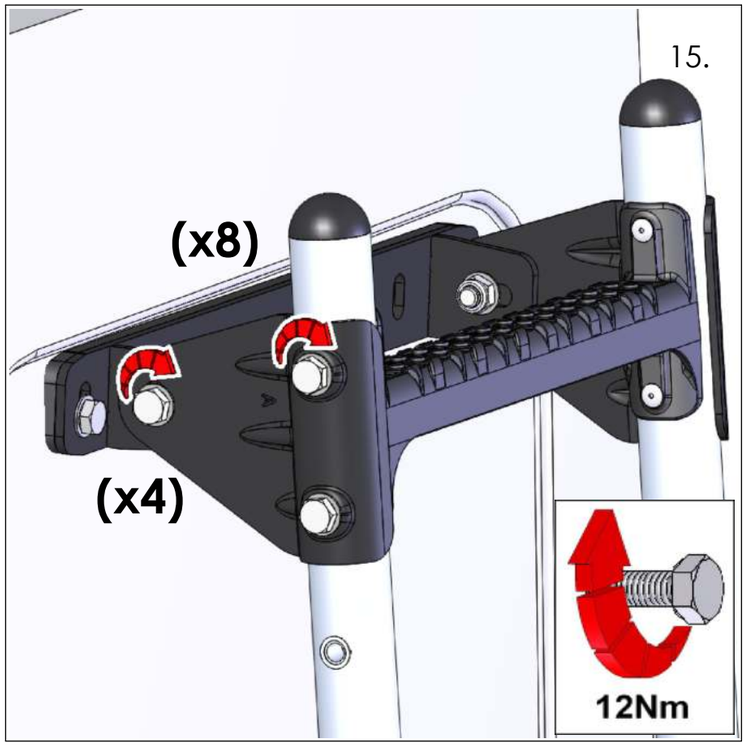
15.
(x8)
(x4)
12Nm

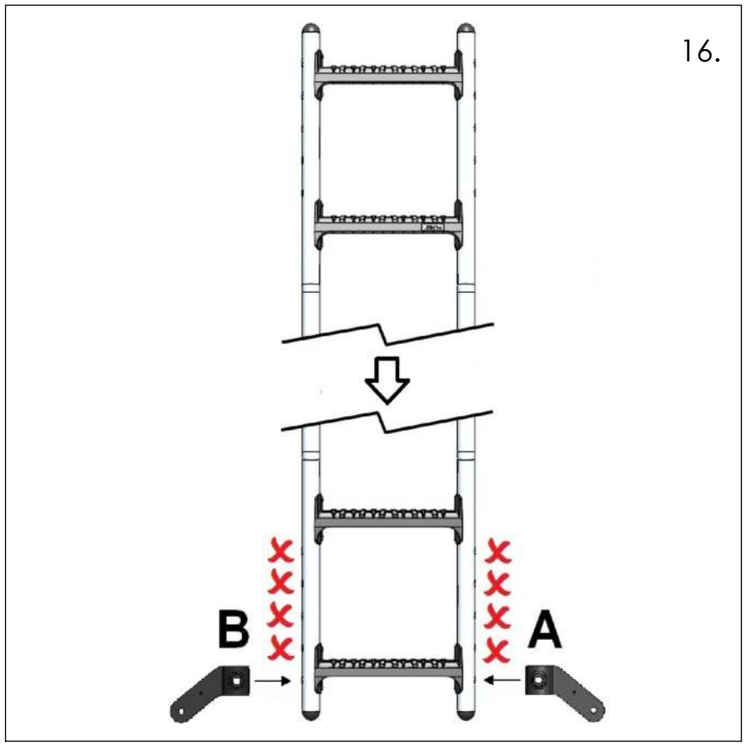
16.
B
A

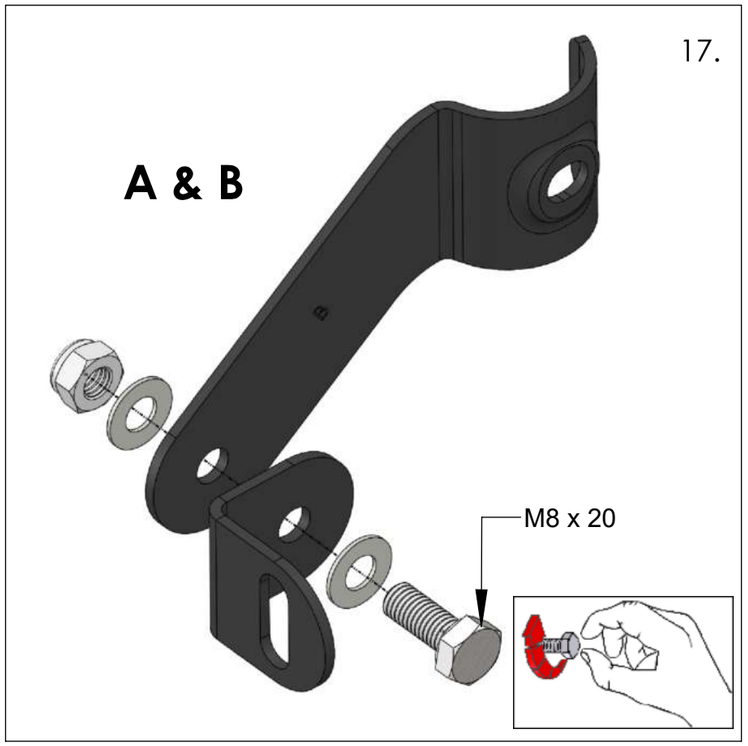
17.
A & B
M8 x 20

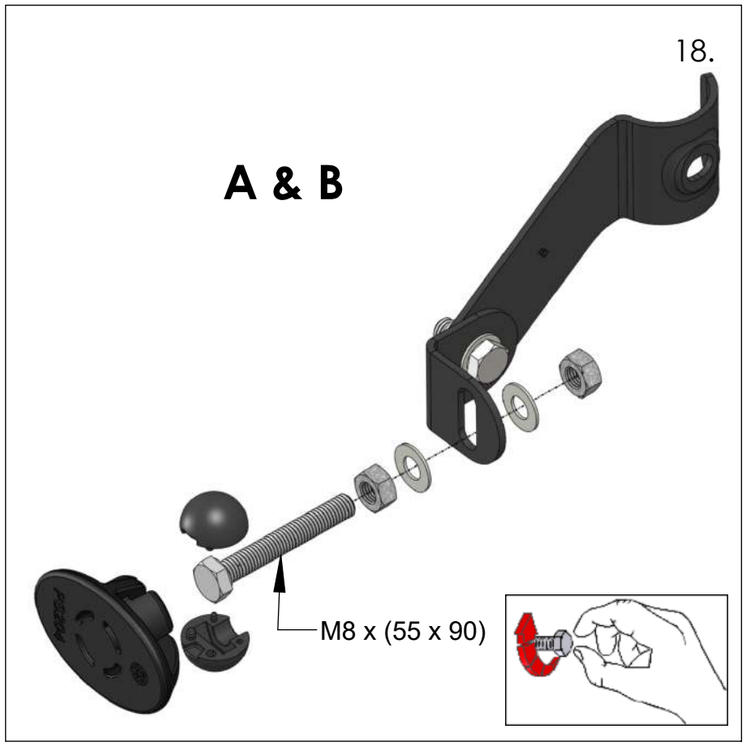
18.
A & B
M8 x (55 x 90)

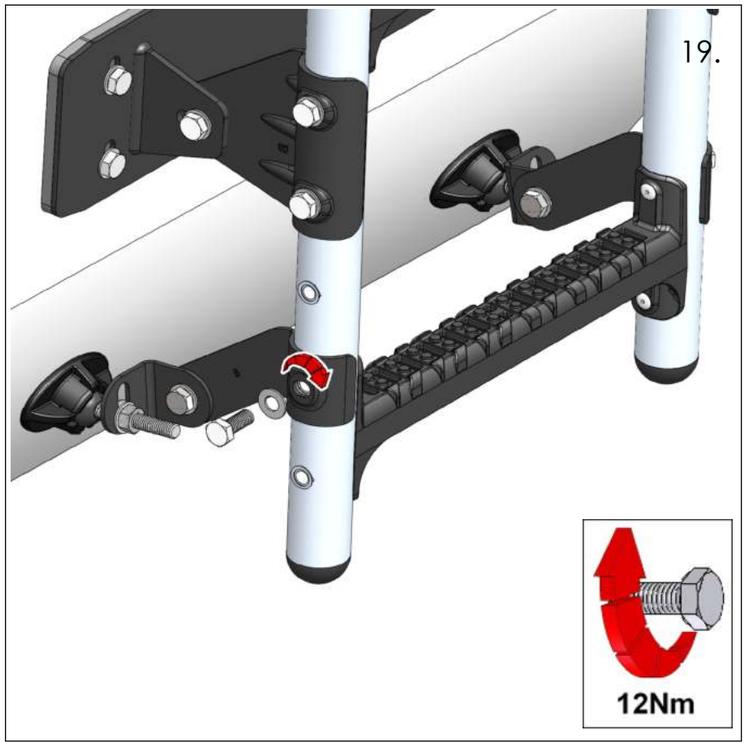
19.
12Nm

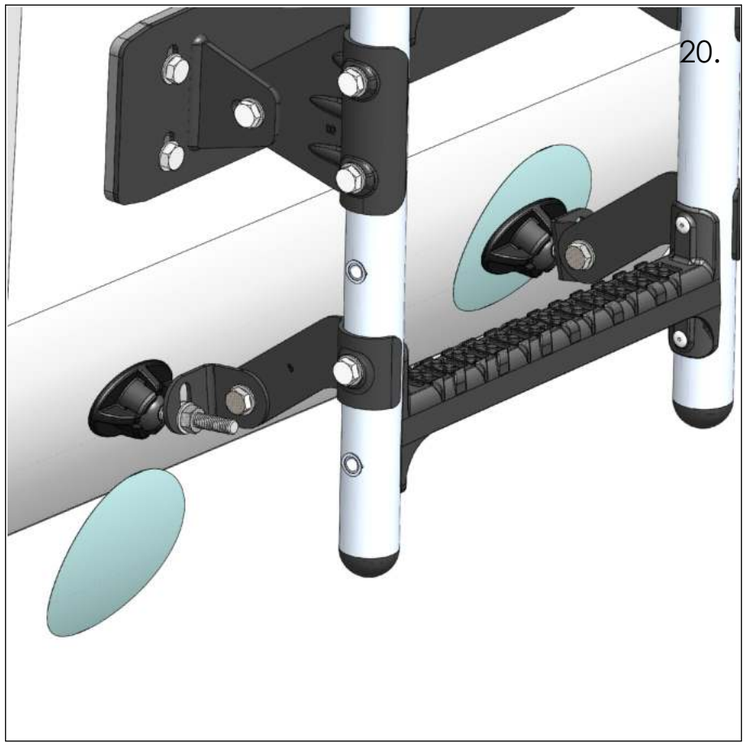
20.

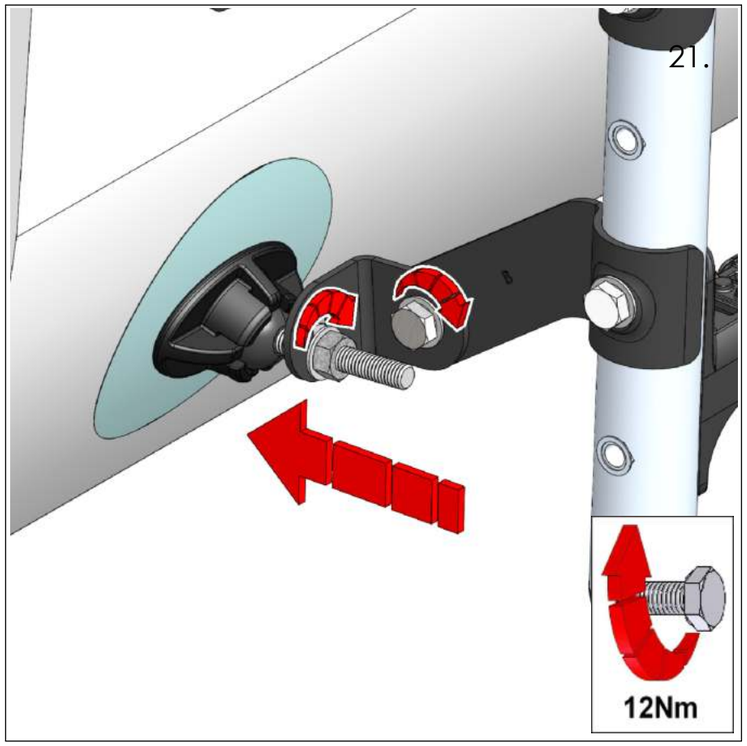
21.
12Nm

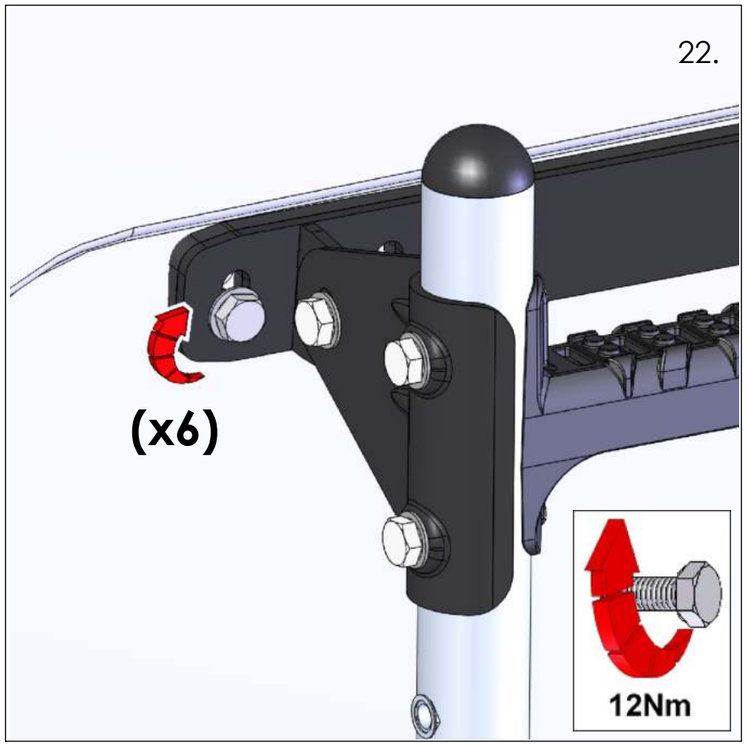
22.
(x6)
12Nm

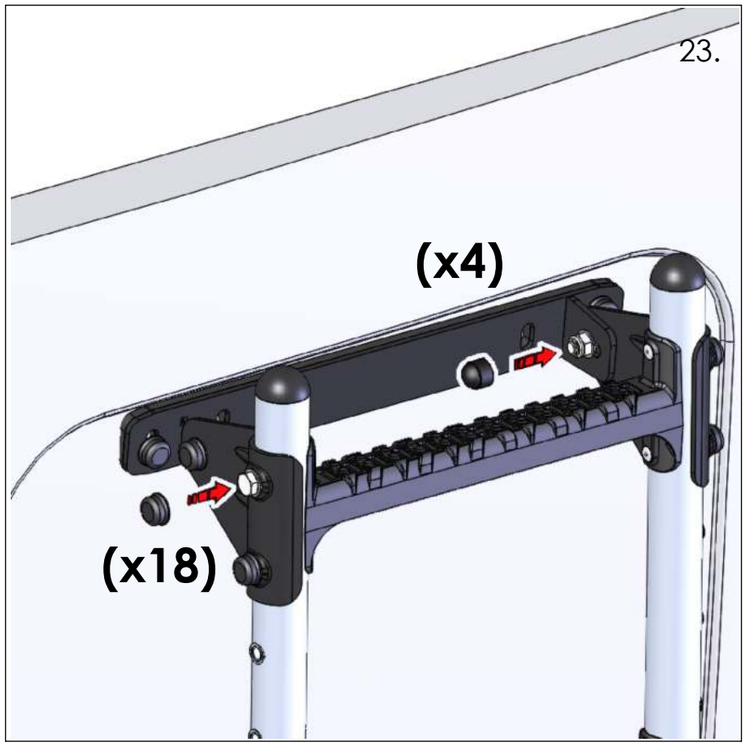
23.
(x4)
(x18)

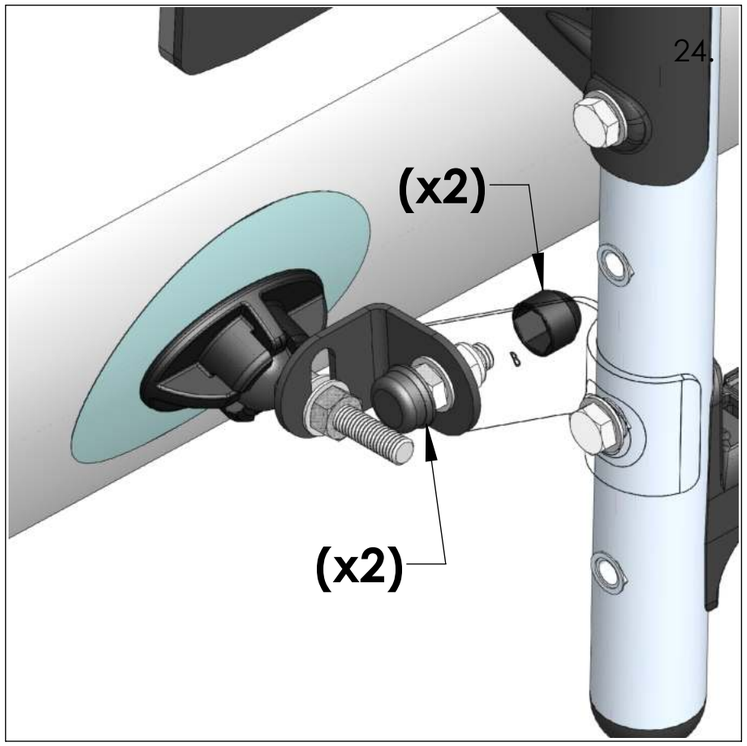
24.
(x2)
(x2)

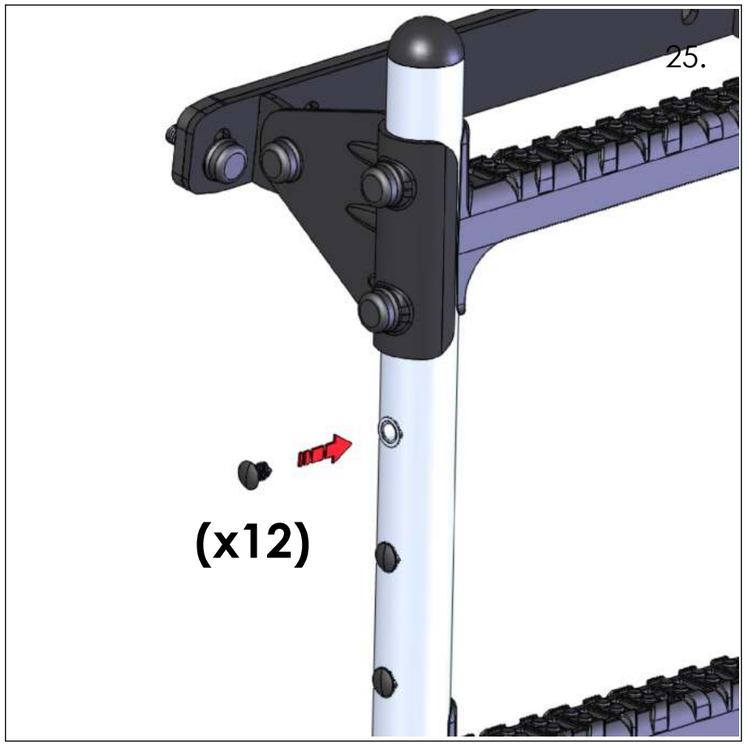
25.
(x12)

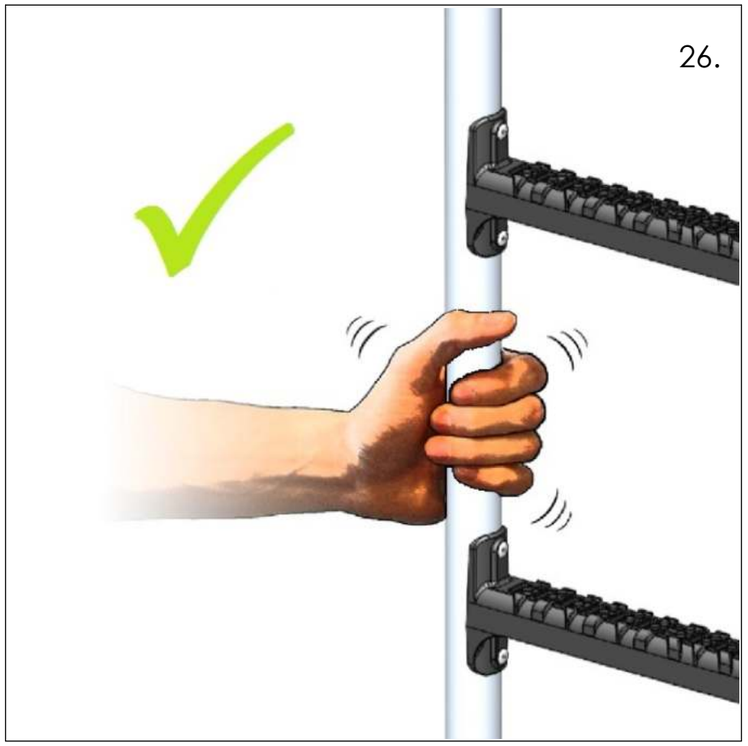
26.