(LW004) x 1

PS054 x 1

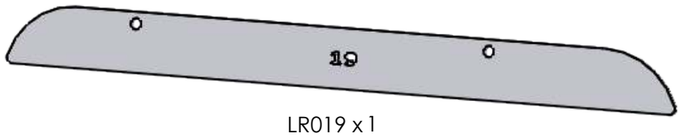
LR019 x 1

(LW007) x 1

PS056 x 2

LR009 x 2

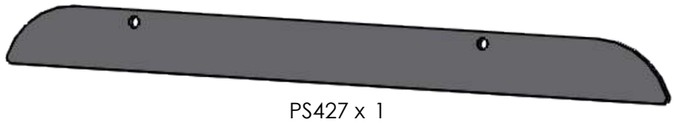
PS427 x 1

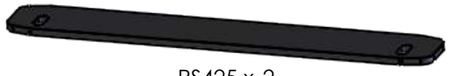
PS425 x 2

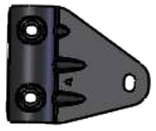
LR005 x 2

LR006 x 2

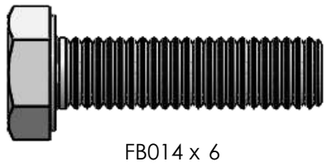
FB014 x 6

FS067 x 12

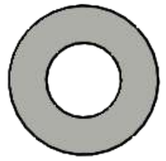
FW021 x 28

FN080 x 10

PS414 x 18

PS065 x 4

PS419 x 12

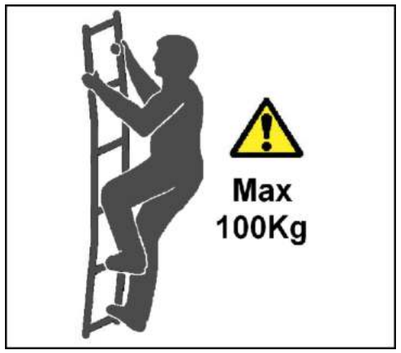

13mm x 2

4mm x 1

9mm x 1

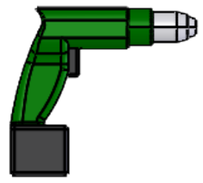

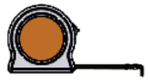

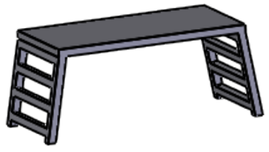

1.

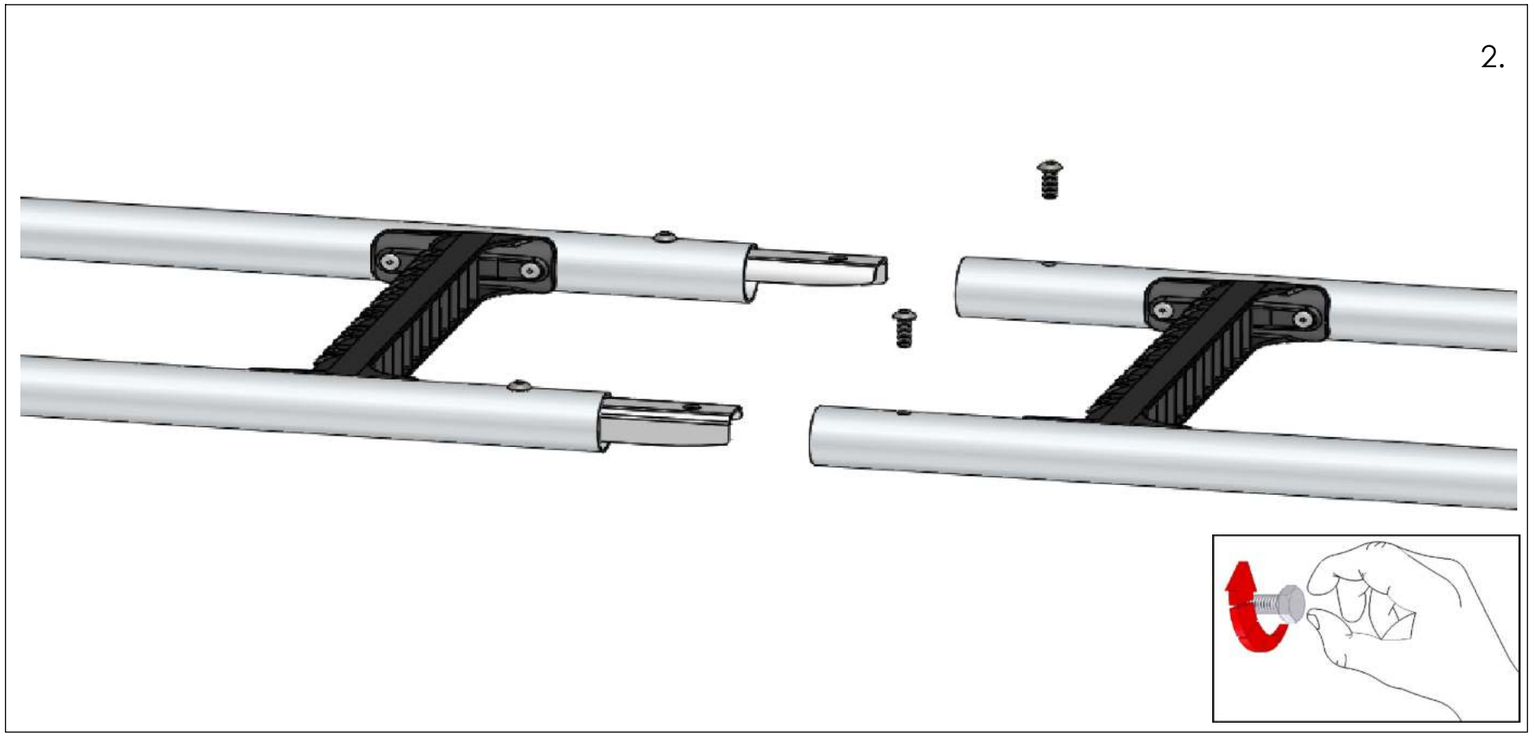
2.

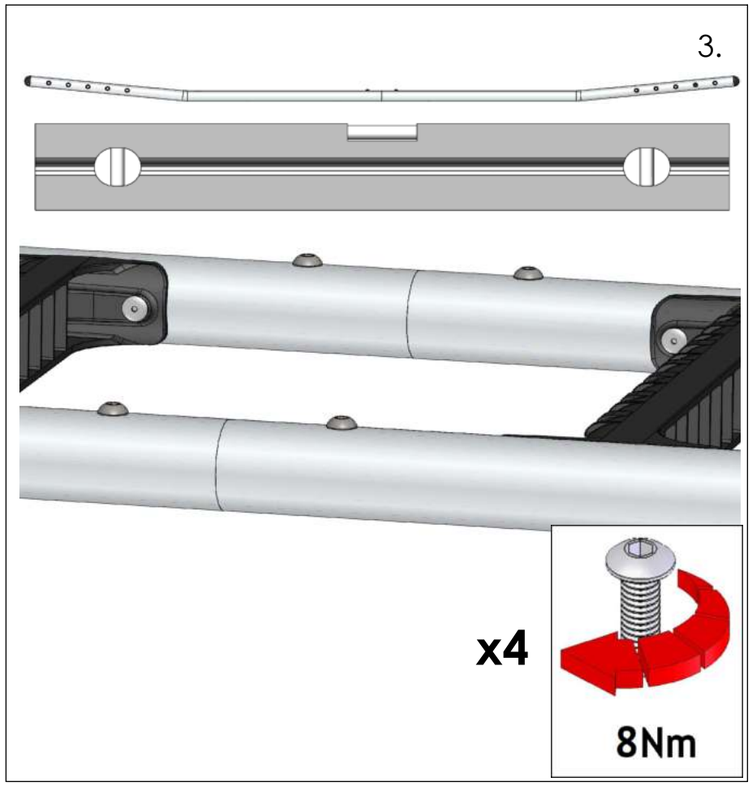
3.
x4
8Nm

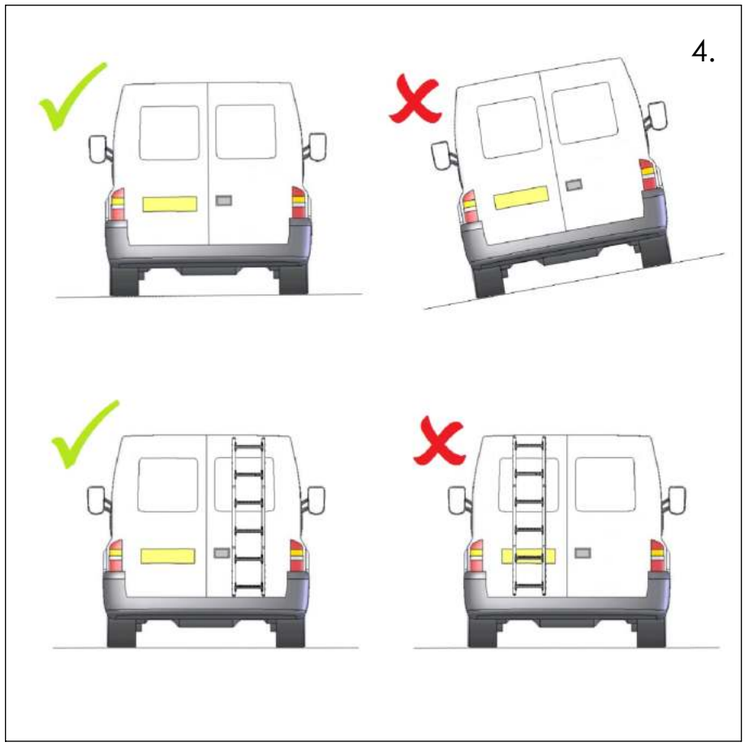
4.

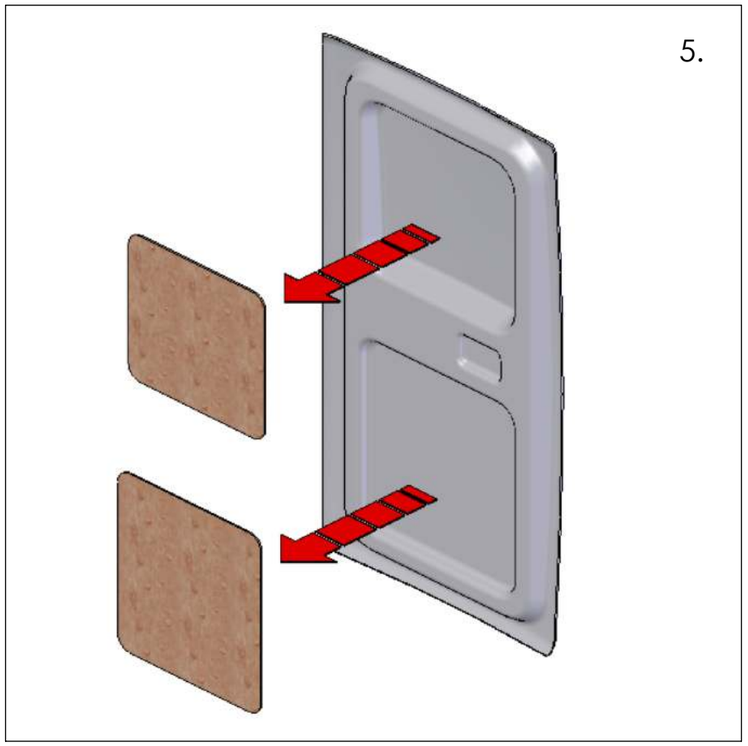
5.

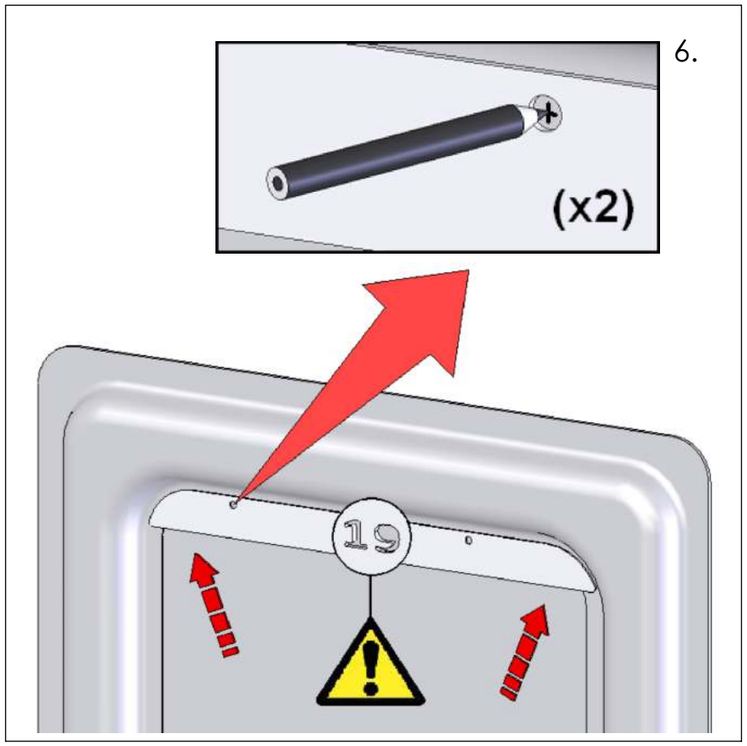
6.
(x2)
19

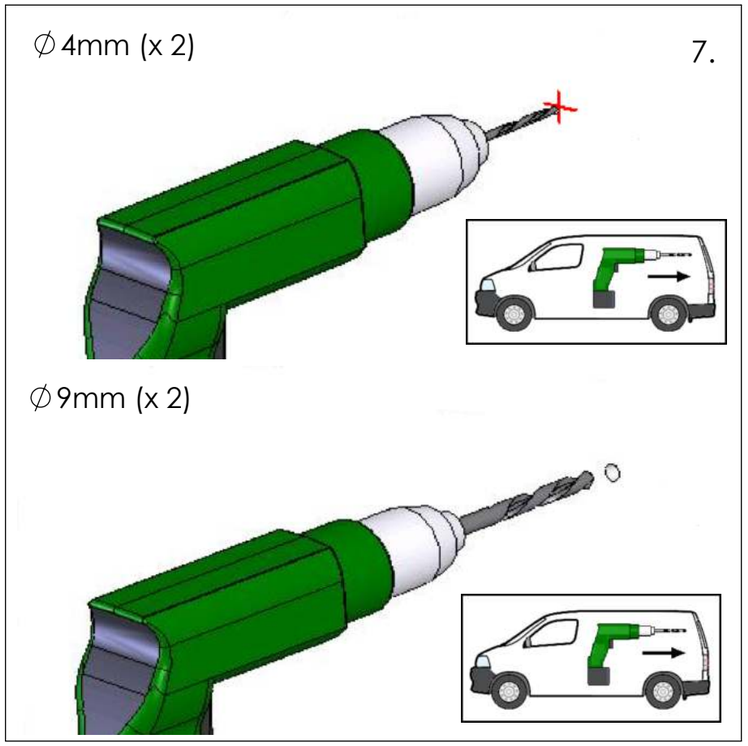
∅4mm (x 2)
7.
∅9mm (x 2)

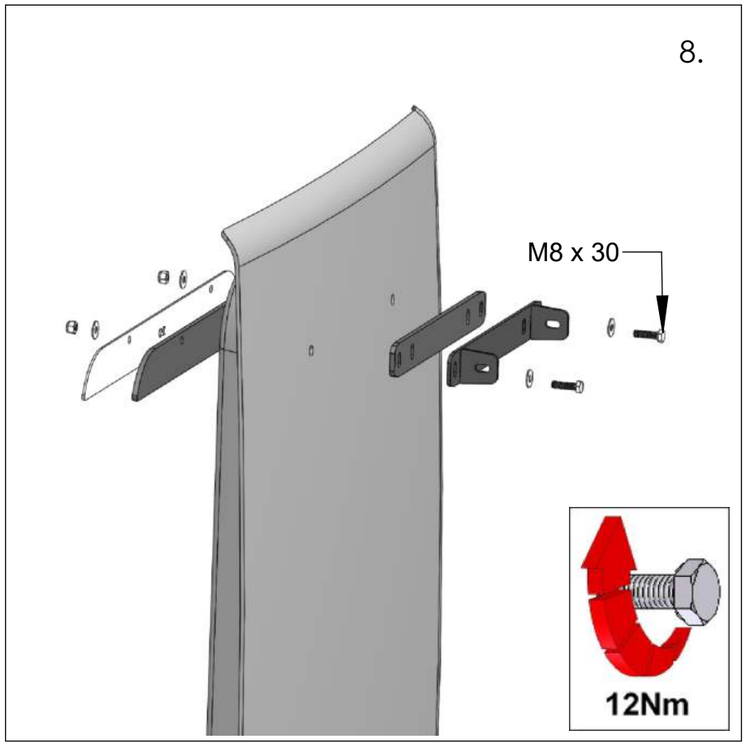
8.
M8 x 30
12Nm

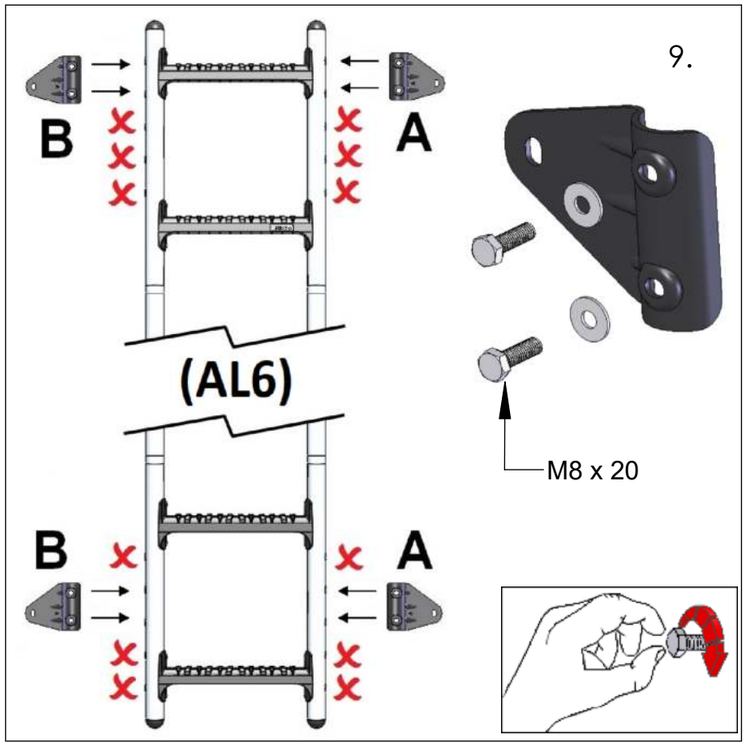
9.
B
A
(AL6)
M8 x 20
B
A

10.

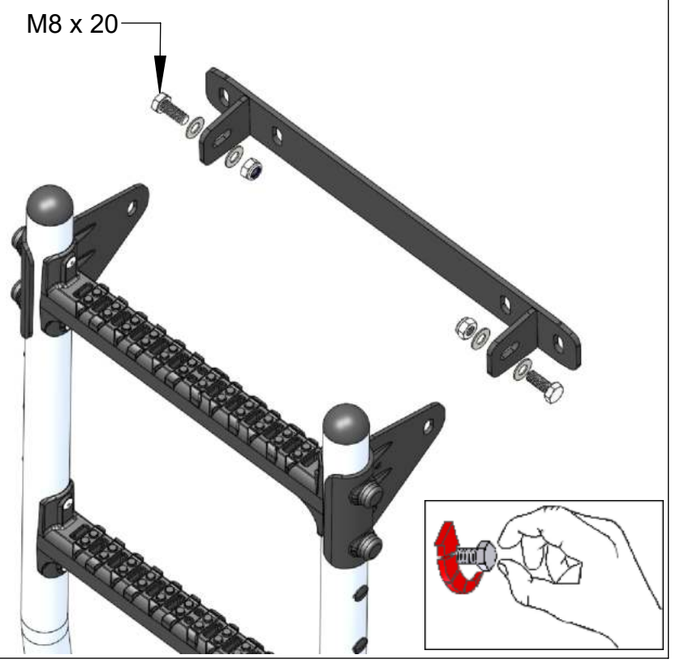

11.

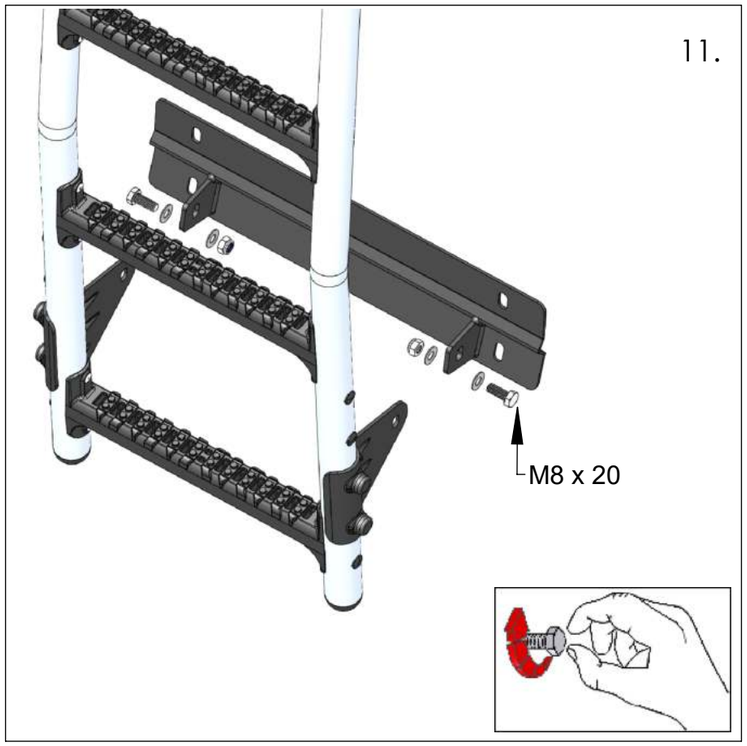

12.

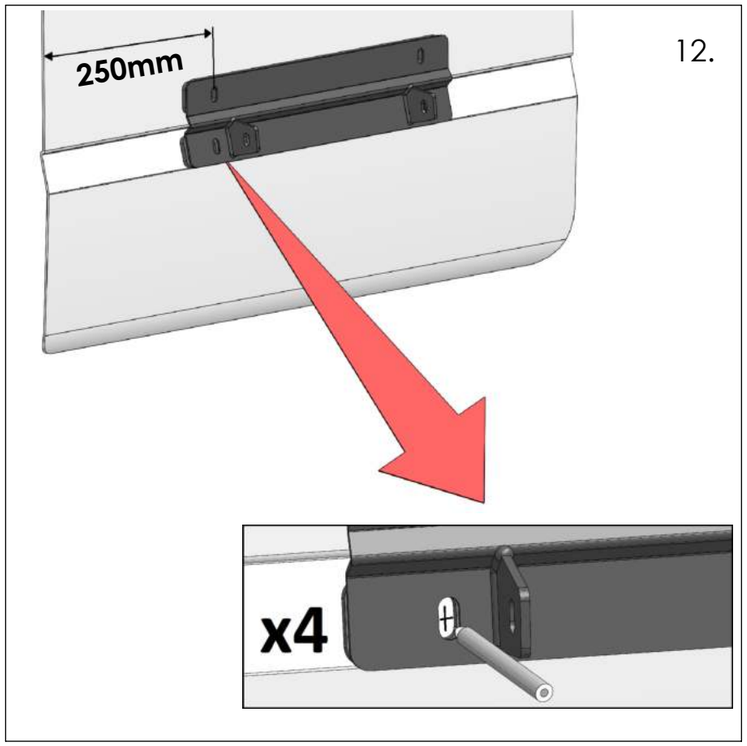

13.

∅4mm (x 4)

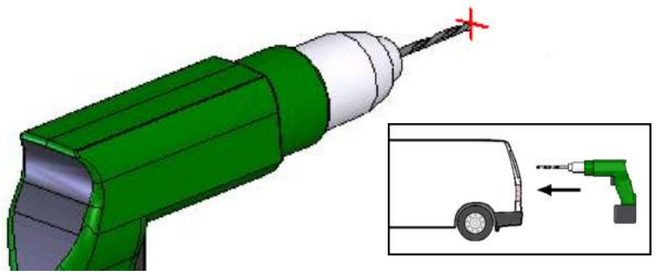

∅9mm (x 4)

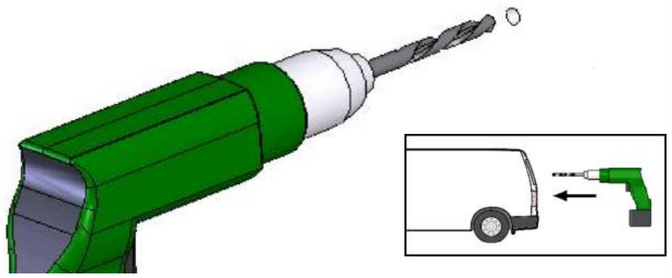

14.

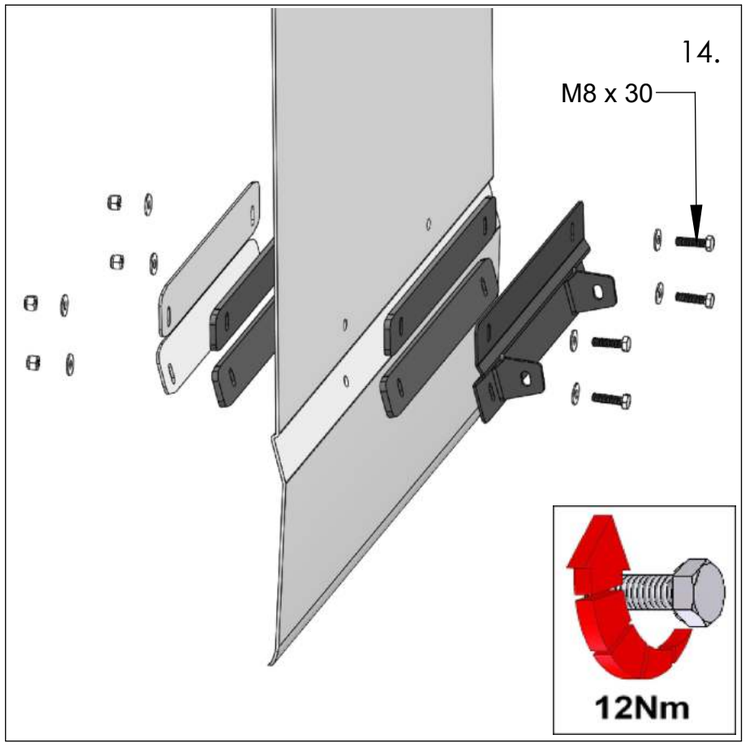

15.

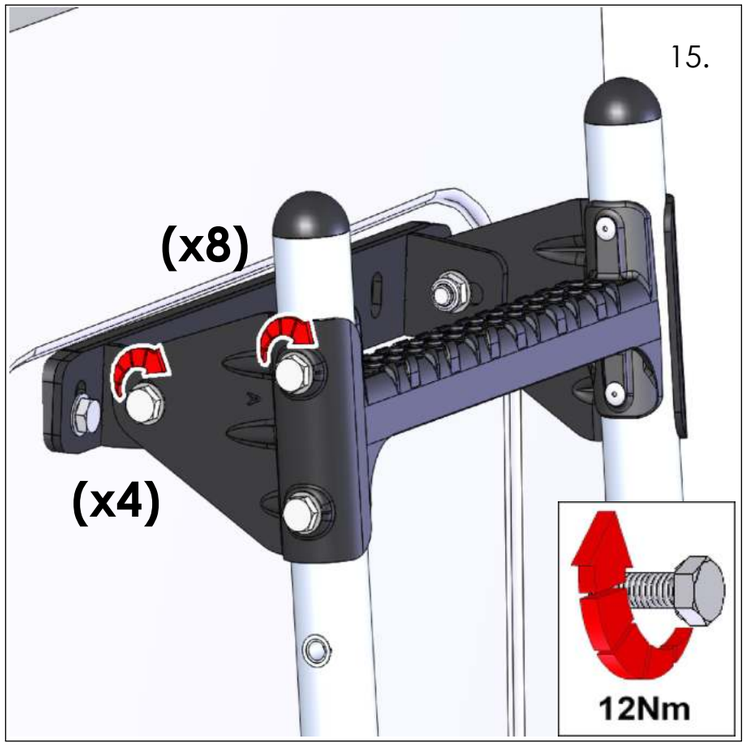

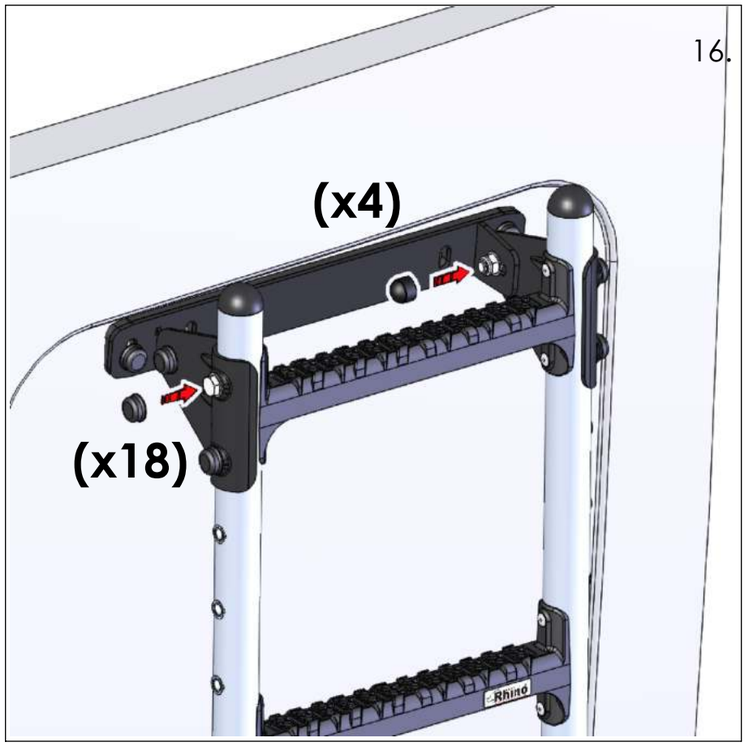
16.
(x4)
(x18)

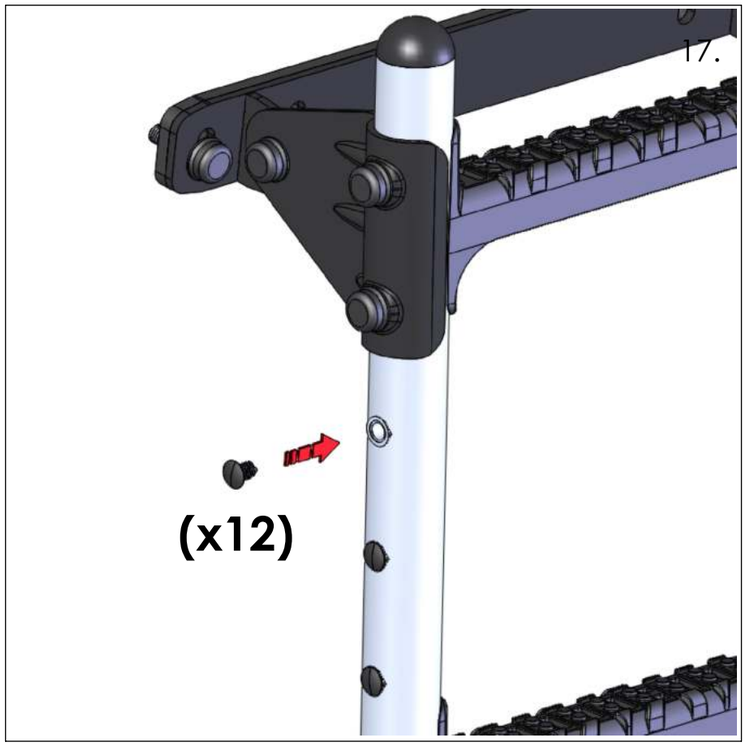
17.
(x12)

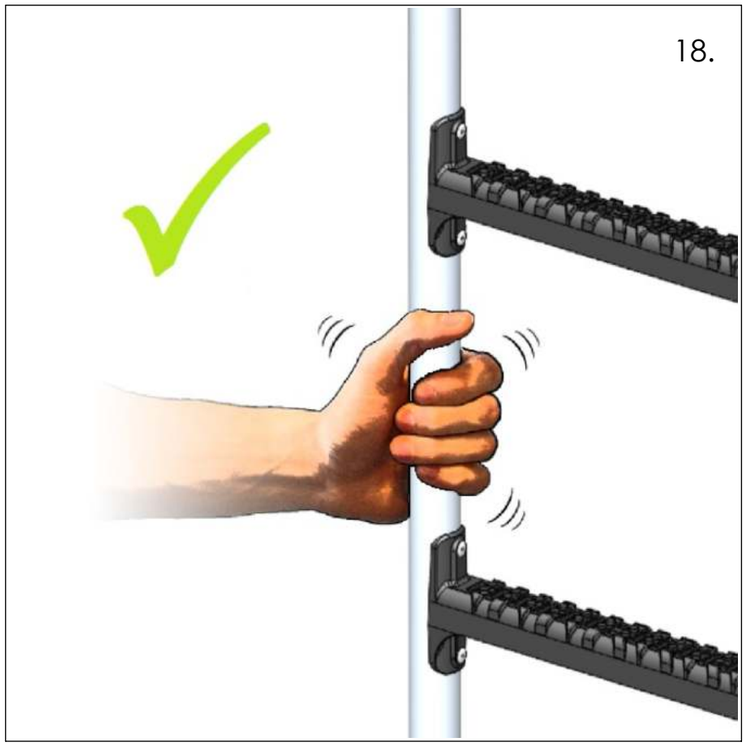
18.