MS201 x 4

MS176 x 4

PS094 x 4

PS083 x 4

SA013 x 2

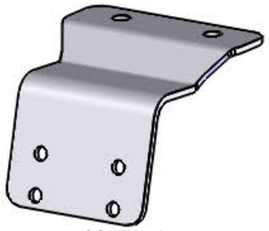

MS267 x 4

PS133-150 x 1

PS082 x 4

PS064 x 1

(1:1)

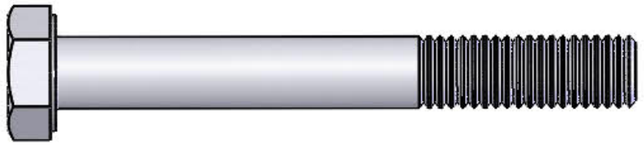

FB003 (M8 x 65) x 8

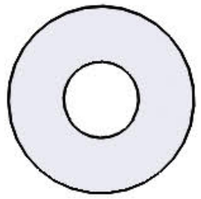

FW002 (M8) x 24

FN006 (M8) x 16

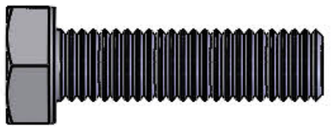

FB006 (M8 x 30) x 8

FS001 (M8 x 30) x 8

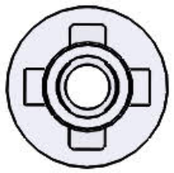

FN003 (M6) x 8

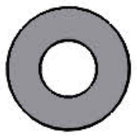

FW001 (M6) x 8

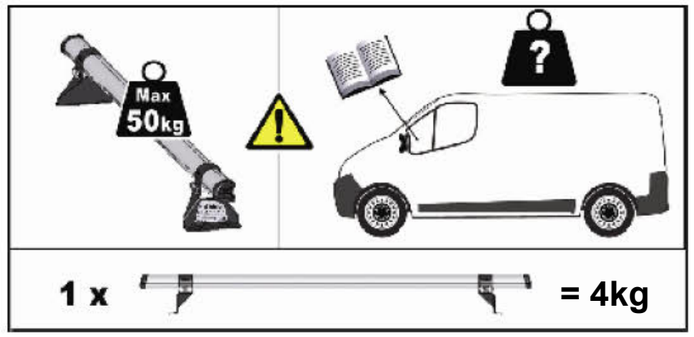

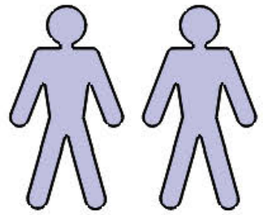

13mm x 2

10mm x 1

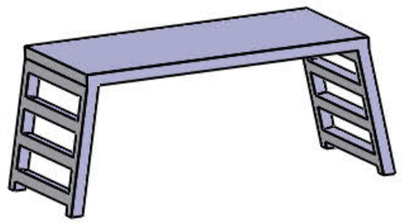

1.

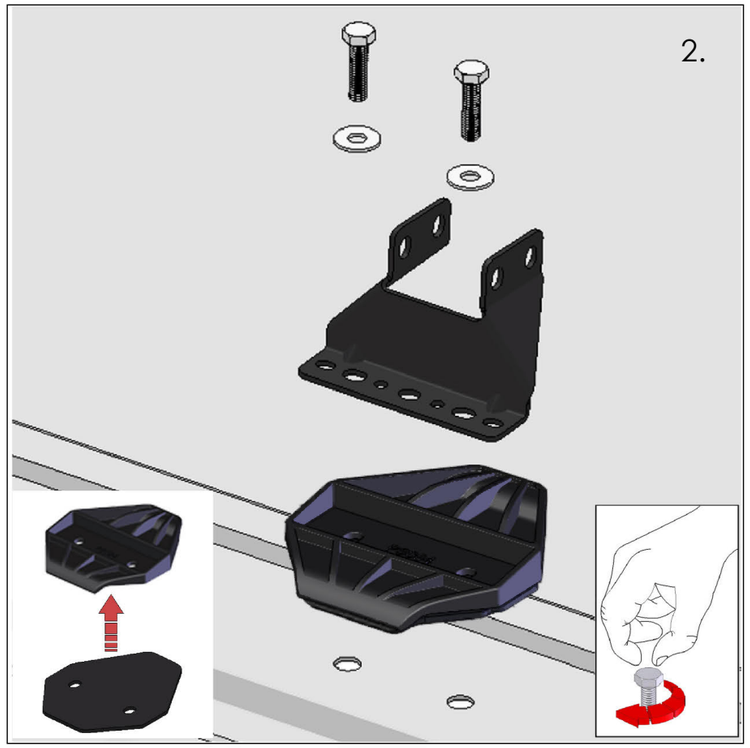
2.

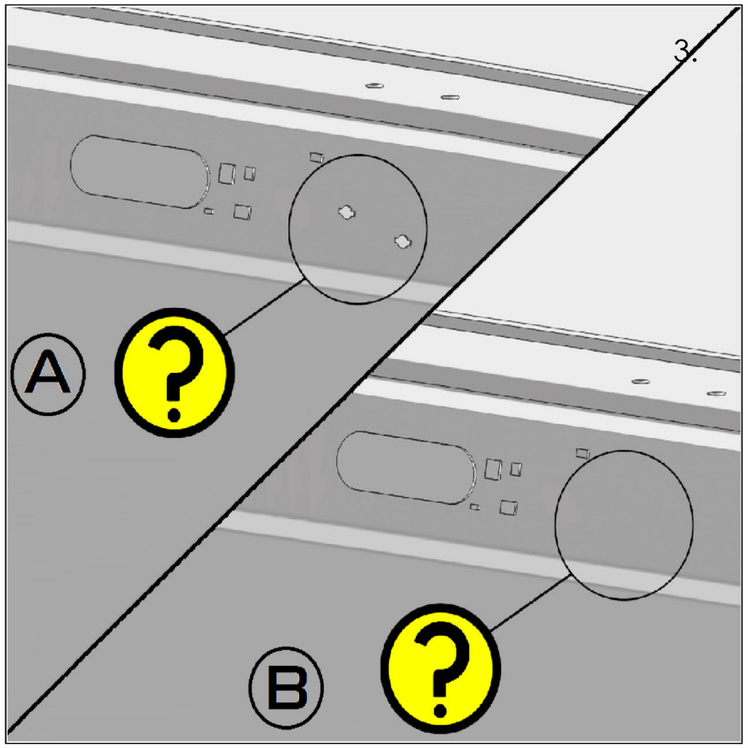
3.
A
?
B
?

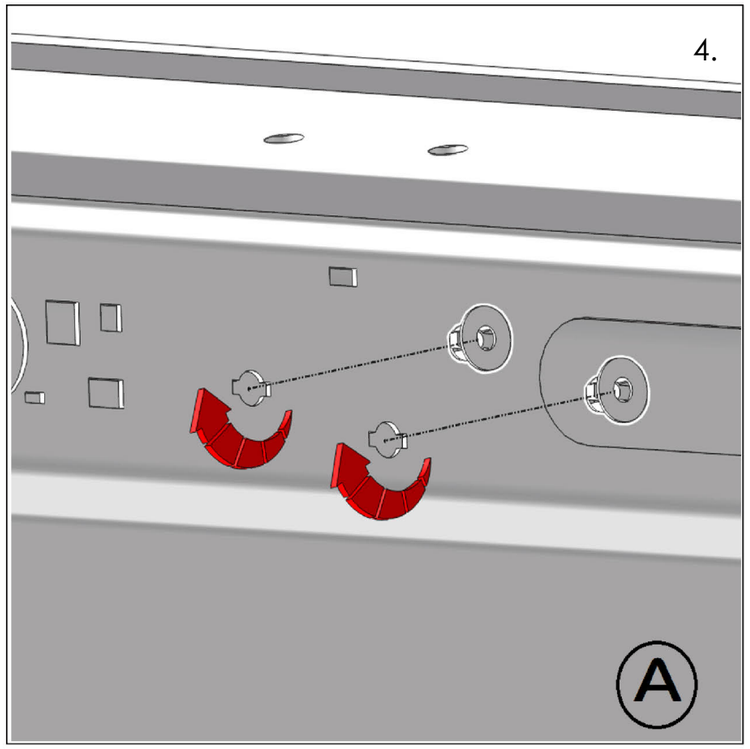
4.
A

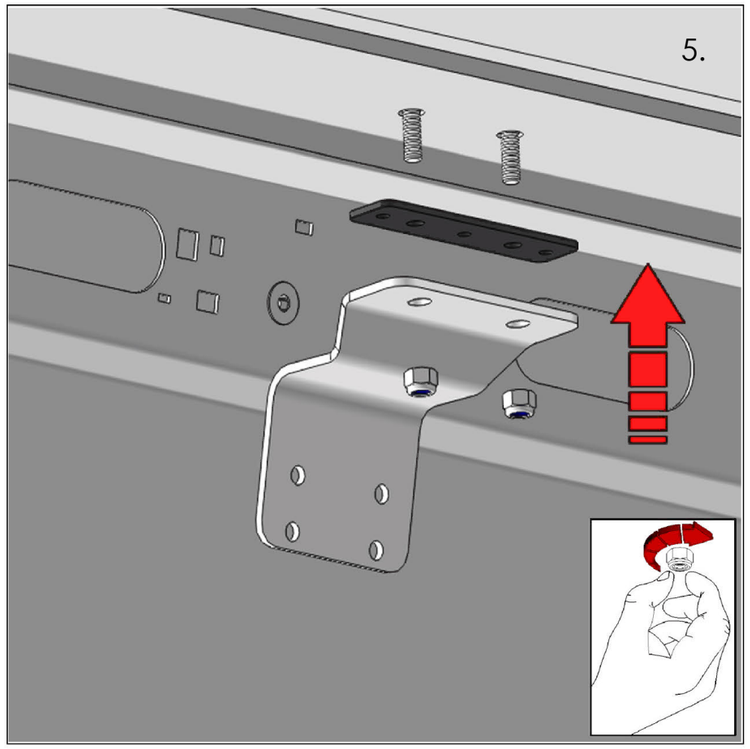
5.

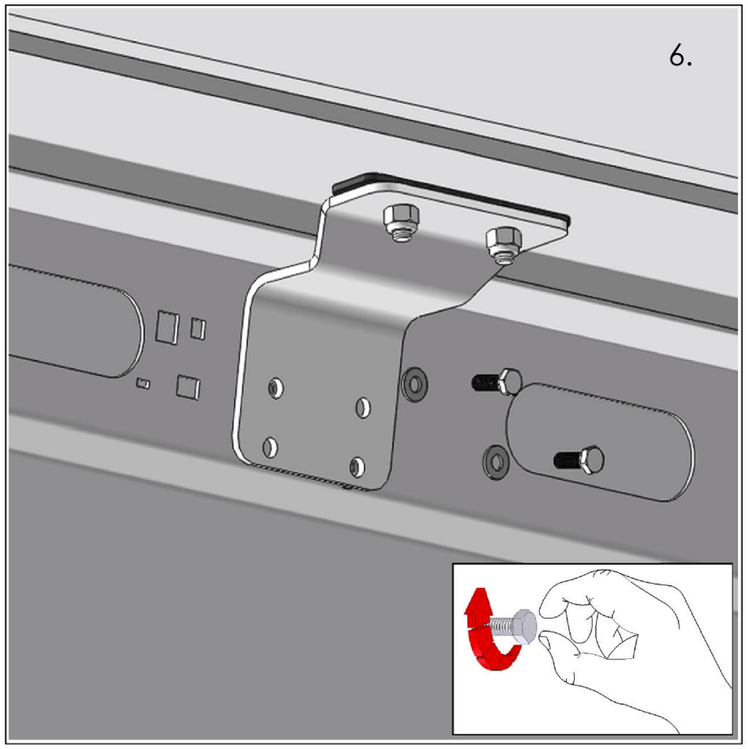
6.

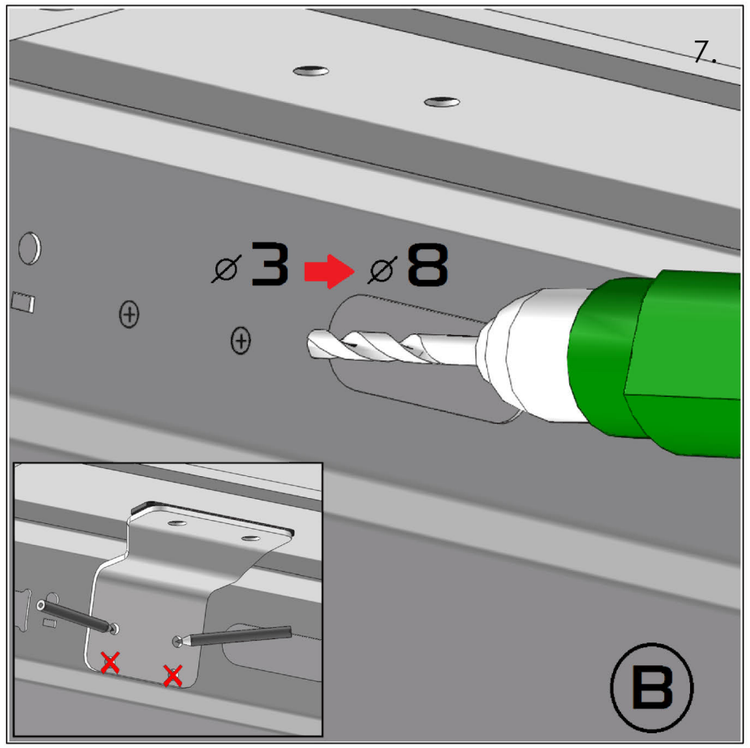
7.
ø3 ø8
B

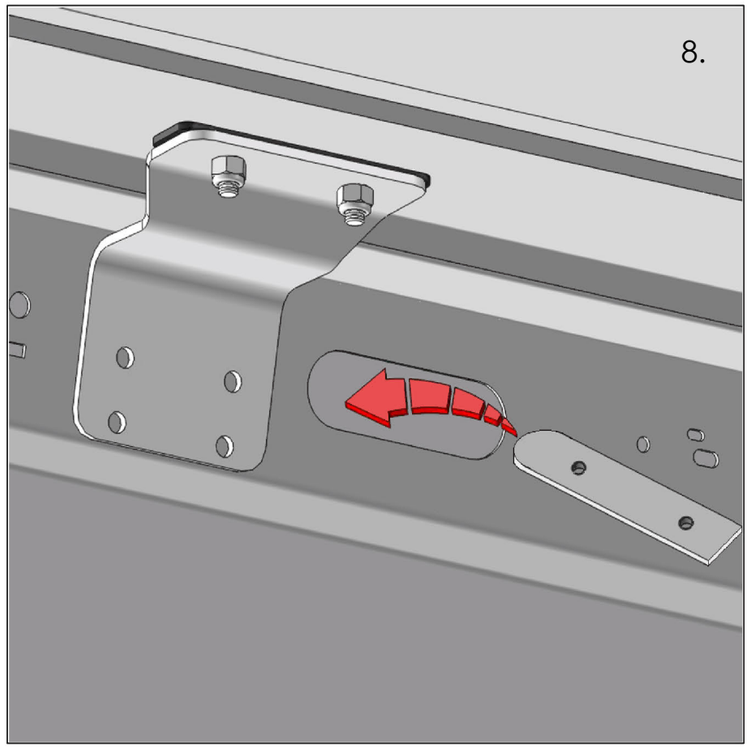
8.

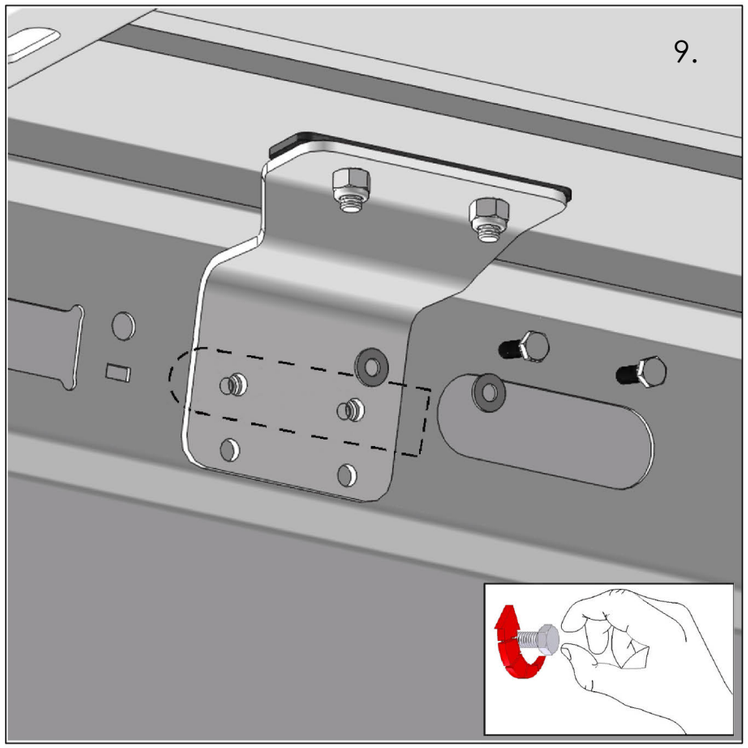
9.

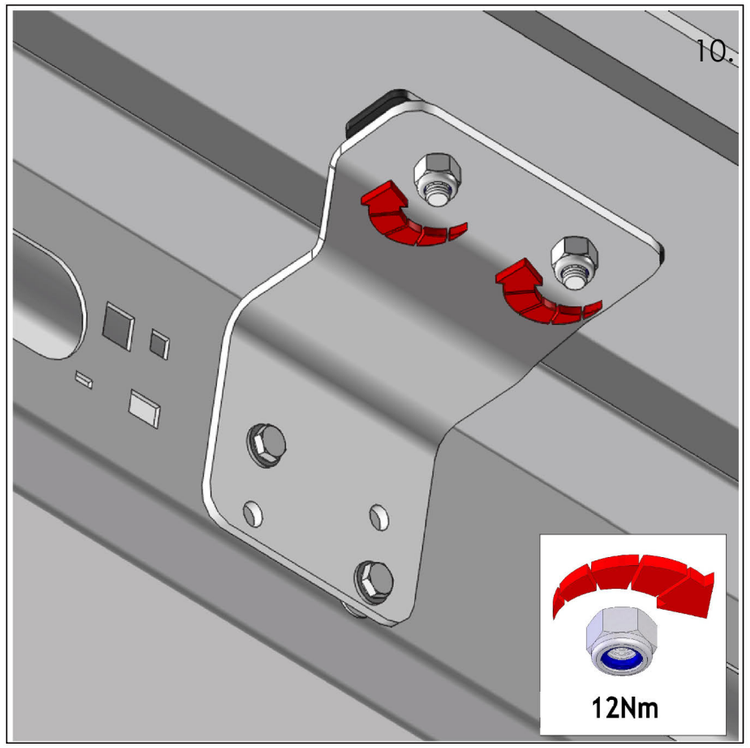
10.
12Nm

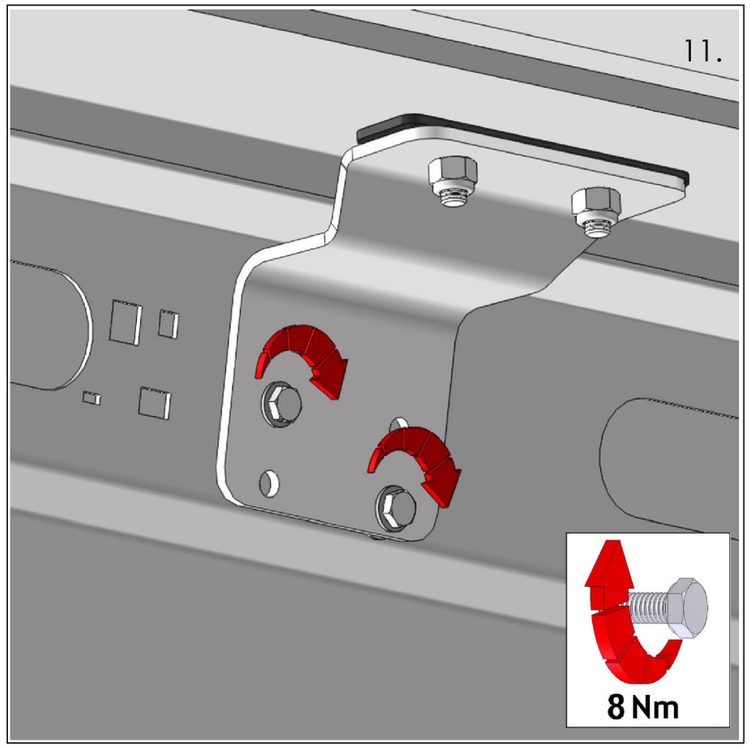
11.
8 Nm

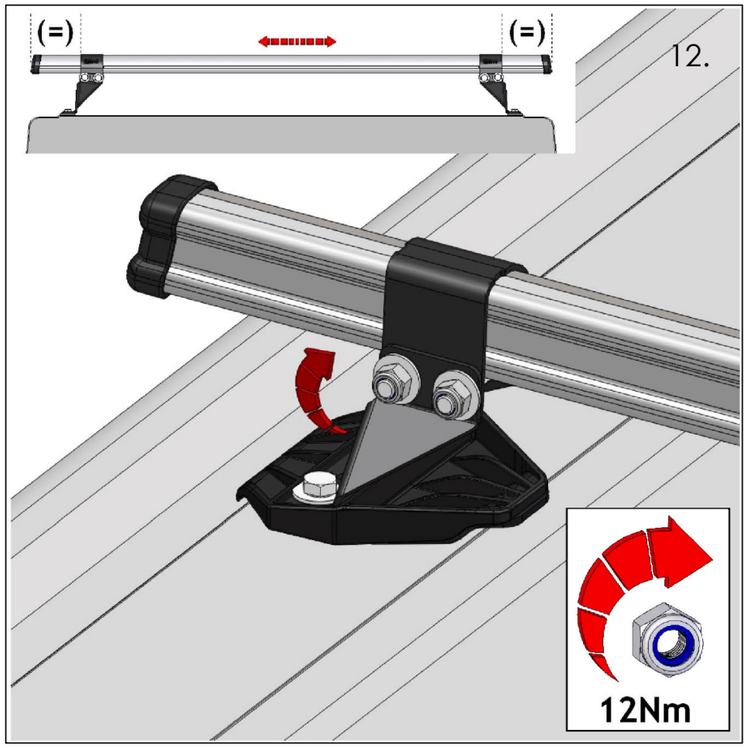
(=)
(=)
12.
12Nm

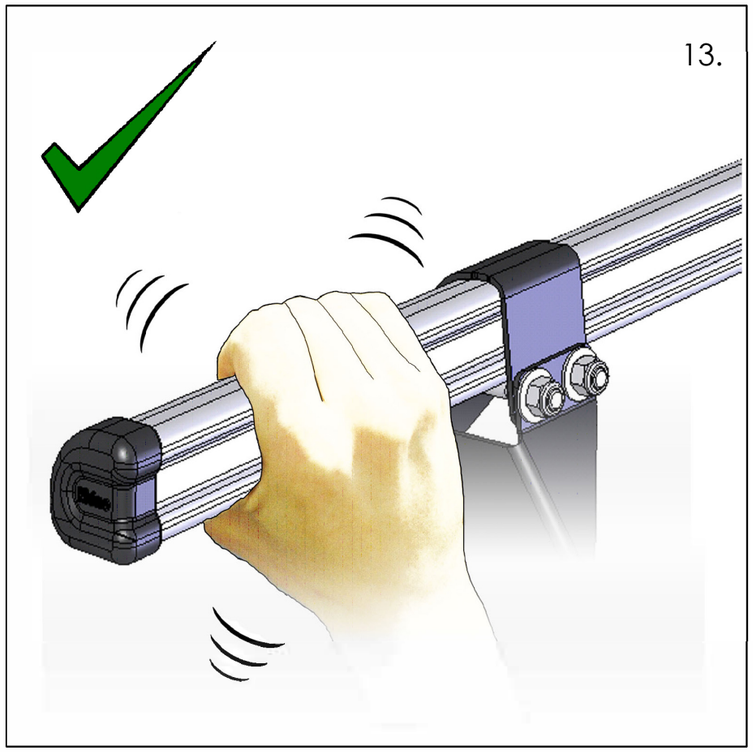
13.

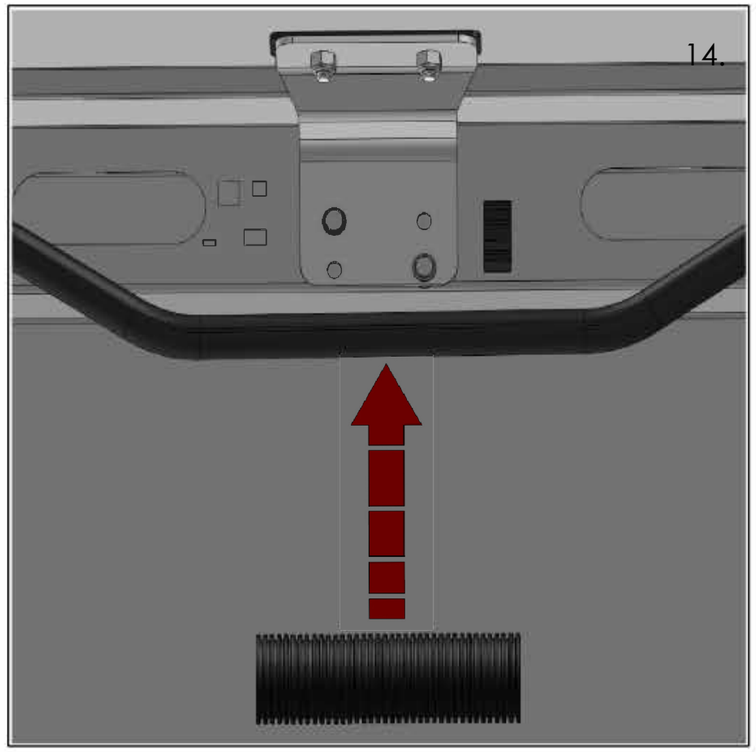
14.

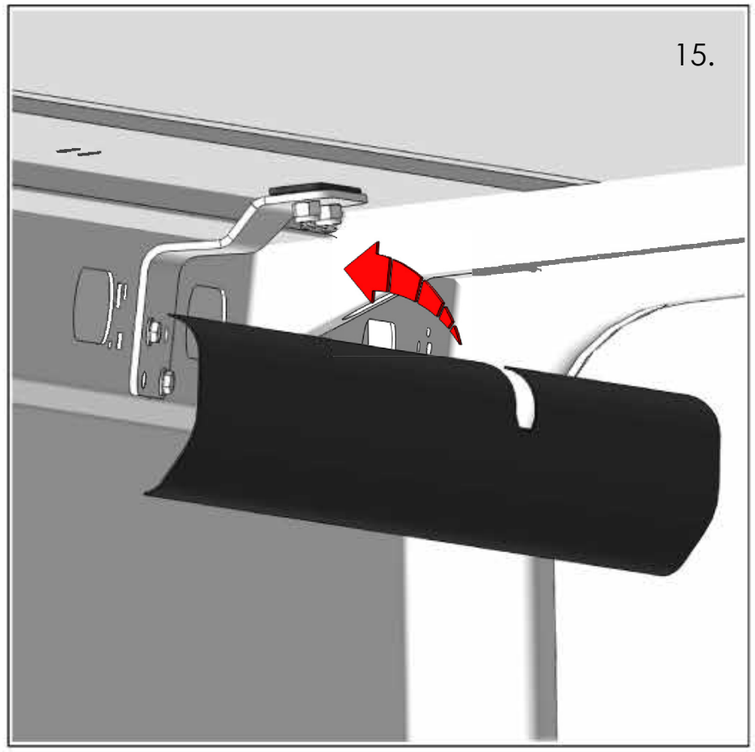
15.

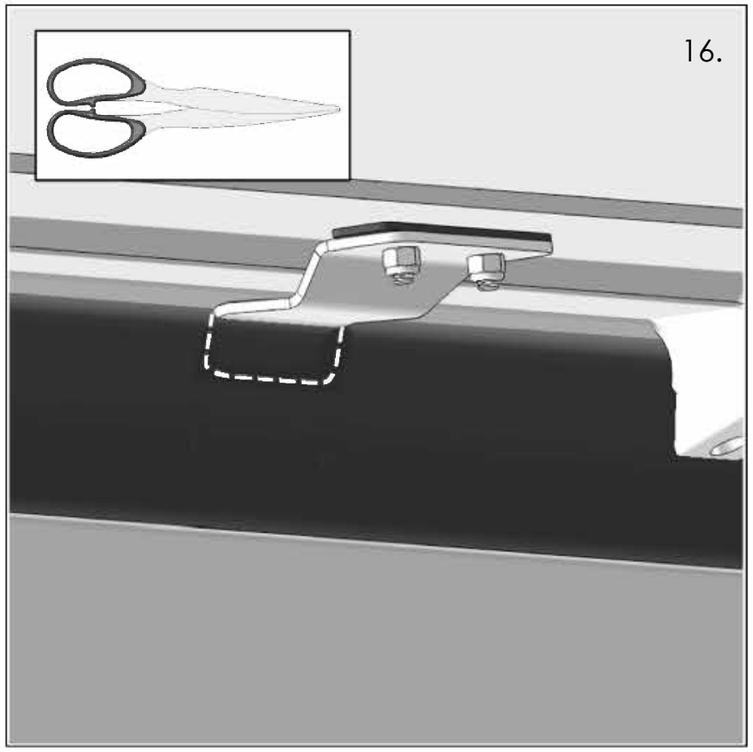
16.